






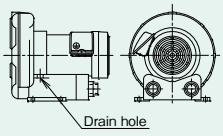

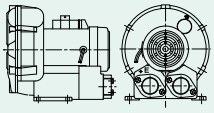
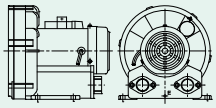

	Model	Part code	Voltage (V)	Frequency (Hz)	Discharge characteristics					Intake characteristics		
					Maximum values			Rated values		Maximum values		
					*Output (kW)	*Current (A)	Static pressure (kPa)	*Static pressure (kPa)	*Flow (m^3/min)	Output (kW)	Current (A)	Static pressure (kPa)
Single phase, standard type	VFZ081PN	VFZ1200	1φ 100/100 110	50／60	0.06/0.08	1.3/1.4-1.3	3.73/4.85	1.96	0.25/0.35	0.05/0.07	1.2/1.3-1.3	3.43/4.6
	VFZ101PN	VFZ1201			0.09/0.12	1.5/2.0-1.9	5.10/6.86	2.94	0.35/0.50	0.08/0.10	1.5/1.8-1.7	4.91/6.55
	VFZ201PN	VFZ1202			0.17/0.28	4.5/4.4-4.2	6.67/8.63	2.94	0.64/0.84	0.17/0.25	4.3/4.2-4.1	6.05/7.85
	VFZ301PN	VFZ1203			0.25/0.38	5.0/5.8-5.6	9.61/12.0	3.92	0.9/1.1	0.25/0.38	5.0/5.8-5.6	8.8/11.2
	VFZ401PN	VFZ1204			0.50/0.75	7.0/11.0-10.0	9.81/13.2	4.9	1.45/1.95	0.48/0.70	7.0/11.0-10.0	9.36/12.3
3-phase, standard type	VFZ081A	VFZ1000	3φ 200/200 220	50／60	0.06/0.08	0.37/0.42-0.40	3.73/4.85	1.96	0.25/0.35	0.06/0.08	0.37/0.42-0.40	3.43/4.60
	VFZ101A	VFZ1001			0.09/0.12	0.52/0.64-0.62	5.15/6.37	2.94	0.35/0.50	0.09/0.12	0.52/0.64-0.62	4.90/6.21
	VFZ201A	VFZ1002			0.17/0.28	1.4/1.4-1.4	6.67/9.02	2.94	0.64/0.84	0.17/0.28	1.4/1.4-1.4	6.27/8.19
	VFZ301A	VFZ1003			0.28/0.42	1.8/1.9-1.8	9.32/12.4	3.92	0.9/1.1	0.28/0.42	1.8/1.9-1.8	8.73/11.4
	VFZ401A	VFZ1004			0.55/0.85	3.1/3.7-3.6	10.4/14.1	4.90	1.45/1.95	0.53/0.83	3.0/3.5-3.4	9.4/12.9
	VFZ501A	VFZ1005			1.3/1.9	5.4/7.4-6.8	14.7/19.6	6.86	2.4/3.0	1.3/1.9	5.4/7.4-6.8	13.7/17.3
	VFZ601A	VFZ1006			2.3/3.4	11.5/13-12.5	21.1/27.5	9.81	3.2/4.4	2.3/3.4	11.5/13-12.5	18.2/23.6
	VFZ701A	VFZ1107			3.3/5.0	16/20-19	21.6/28.4	9.81	4.4/5.7	3.1/5.4	14/19-18	18.3/22.9
	VFZ801A	VFZ1108			5.0/7.0	21/28-26	25.5/33.3	9.81	6.3/8.5	5.2/7.6	20/30-28	21.6/26.6
	VFZ901A	VFZ1109			7.0/11.0	31/40-38	25.5/31.4	14.7	7.5/10.8	7.0/13	30/41-40	21.4/27.6
3-phase, standard type (for companion flange)	VFZ101AF	VFZ1101	3φ 200/200 220	50／60	0.09/0.12	0.52/0.64-0.62	5.15/6.37	2.94	0.35/0.50	0.09/0.12	0.52/0.64-0.62	4.90/6.21
	VFZ201AF	VFZ1102			0.17/0.28	1.4/1.4-1.4	6.67/9.02	2.94	0.64/0.84	0.17/0.28	1.4/1.4-1.4	6.27/8.19
	VFZ301AF	VFZ1103			0.28/0.42	1.8/1.9-1.8	9.32/12.4	3.92	0.9/1.1	0.28/0.42	1.8/1.9-1.8	8.73/11.4
	VFZ401AF	VFZ1104			0.55/0.85	3.1/3.7-3.6	10.4/14.1	4.90	1.45/1.95	0.53/0.83	3.0/3.5-3.4	9.4/12.9
	VFZ501AF	VFZ1105			1.3/1.9	5.4/7.4-6.8	14.7/19.6	6.86	2.4/3.0	1.3/1.9	5.4/7.4-6.8	13.7/17.3
	VFZ601AF	VFZ1106			2.3/3.4	11.5/13-12.5	21.1/27.5	9.81	3.2/4.4	2.3/3.4	11.5/13-12.5	18.2/23.6
3-phase, low-noise type	VFZ101AN	VFZ1021	3φ 200/200 220	50／60	0.09/0.12	0.52/0.64-0.62	5.15/6.37	2.94	0.35/0.50	0.09/0.12	0.52/0.64-0.62	4.90/6.21
	VFZ201AN	VFZ1022			0.17/0.28	1.4/1.4-1.4	6.67/9.02	2.94	0.64/0.84	0.17/0.28	1.4/1.4-1.4	6.27/8.19
	VFZ301AN	VFZ1023			0.28/0.42	1.8/1.9-1.8	9.32/12.4	3.92	0.9/1.1	0.28/0.42	1.8/1.9-1.8	8.73/11.4
	VFZ401AN	VFZ1024			0.55/0.85	3.1/3.7-3.6	10.4/14.1	4.90	1.45/1.95	0.53/0.83	3.0/3.5-3.4	9.4/12.9
	VFZ501AN	VFZ1025			1.3/1.9	5.4/7.4-6.8	14.7/19.6	6.86	2.4/3.0	1.3/1.9	5.4/7.4-6.8	13.7/17.3
	VFZ601AN	VFZ1026			2.3/3.4	11.5/13-12.5	21.1/27.5	9.81	3.2/4.4	2.3/3.4	11.5/13-12.5	18.2/23.6
	VFZ701AN	VFZ1027			3.3/5.0	16/20-19	21.6/28.4	9.81	4.4/5.7	3.1/5.4	14/19-18	18.3/22.9
	VFZ801AN	VFZ1028			5.0/7.0	21/28-26	25.5/33.3	9.81	6.3/8.5	5.2/7.6	20/30-28	21.6/26.6
	VFZ901AN	VFZ1029			7.0/11.0	31/10-38	25.5/31.4	14.7	7.5/10.8	7.0/13	30/41-40	21.4/27.6

	Model	Maximum discharge air flow (m^3/min)	Heat-resistance class	Noise level (dB(A))	Inlet and outlet diameters (mm, inches)	Approximate mass (kg)	Starting current (A)	Auto-breaker		Solenoid switch	Thermal relay	
								Model	Rated current (A)		Model	Rated current (A)
Single phase, standard type	VFZ081PN	0.47/0.56	B	53.0/55.5	32	5.5	4.0/3.8-4.2	-	-	SW-03	TR-0N	0.95-1.45
	VFZ101PN	0.58/0.69	B	48.5/51.5	32	8.5	9.4/9.2-10.0	-	-			1.7-2.6
	VFZ201PN	0.86/1.05	B	55.0/59.5	32	12.0	14.5/13.0-14.5	BW32SAM-2P005	5			4-6
	VFZ301PN	1.25/1.45	B	55.5/59.5	38	12.0	18.5/17.5-19.5	※BW32SAM-2P008	8			5-8
	VFZ401PN	2.05/2.45	B	62.5/66.5	50,R1½	22.0	37.0/33.0-37.0	※BW32SAM-2P016	16			7-11
3-phase, standard type	VFZ081A	0.47/0.56	B	53.0/55.5	32	5.5	2.0/2.0-2.2	-	-	SW-03	TR-0N	0.36-0.54
	VFZ101A	0.58/0.69	B	52.5/56.5	32	7.5	4.2/3.9-4.2	-	-			0.48-0.72
	VFZ201A	0.90/1.09	B	57.5/62.0	32	9.0	9.0/8.1-9.0	BW32AAM-3P1P4	1.4			0.95-1.45
	VFZ301A	1.28/1.40	B	58.0/62.0	38	11.0	13.0/12.0-13.5	BW32SAM-3P002	2			1.7-2.6
	VFZ401A	2.0/2.5	B	65.5/69.5	50,R1½	19.0	27.0/25.0-27.5	BW32AAM-3P004	4			2.8-4.2
	VFZ501A	3.4/4.0	F	70.5/74.5	50,R1½	27.5	49/46-51	※BW32AAM-3P008	8			5-8
	VFZ601A	4.2/5.5	F	70.0/74.5	63,R2	43	100/88-97	※BW32AAM-3P016	16	SW-5-1	TR-5-1N	12-18
	VFZ701A	6.2/7.2	F	75.0/79.5	Rp2	50	146/125-136	※BW32AAM-3P024	24	SW-N1	TR-N2	18-26
	VFZ801A	8.7/10.3	F	78.0/81.0	Rp2½	89	175/160-170	※BW32AAM-3P032	32	SW-N2		24-36
	VFZ901A	13/15.5	F	79.5/83.0	Rp3	107	310/280-300	※BW63EAM-3P063	63	SW-N2S	TR-N3	34-50
3-phase, standard type (for companion flange)	VFZ101AF	0.58/0.69	B	52.5/56.5	Rp1	7.5	4.2/3.9-4.2	-	-	SW-03	TR-0N	0.48-0.72
	VFZ201AF	0.90/1.09	B	57.5/62.0	Rp1	9.0	9.0/8.1-9.0	BW32AAM-3P1P4	1.4			0.95-1.45
	VFZ301AF	1.28/1.40	B	58.0/62.0	Rp1¼	11.0	13.0/12.0-13.5	BW32SAM-3P002	2			1.7-2.6
	VFZ401AF	2.0/2.5	B	65.5/69.5	Rp1½	19.0	27.0/25.0-27.5	BW32AAM-3P004	4			2.8-4.2
	VFZ501AF	3.4/4.0	F	70.5/74.5	Rp1½	27.5	49/46-51	※BW32AAM-3P008	8			5-8
	VFZ601AF	4.2/5.5	F	70.0/74.5	Rp2	43	100/88-97	※BW32AAM-3P016	16	SW-5-1	TR-5-1N	12-18
3-phase, low-noise type	VFZ101AN	0.58/0.69	B	49.5/51.5	32	9.0	4.2/3.9-4.2	-	-	SW-03	TR-0N	0.48-0.72
	VFZ201AN	0.90/1.09	B	55.5/59.0	32	10.0	9.0/8.1-9.0	BW32AAM-3P1P4	1.4			0.95-1.45
	VFZ301AN	1.28/1.40	B	55.5/59.5	38	13.0	13.0/12.0-13.5	BW32SAM-3P002	2			1.7-2.6
	VFZ401AN	2.0/2.5	B	62.0/66.0	50,R1½	22.0	27.0/25.0-27.5	BW32AAM-3P004	4			2.8-4.2
	VFZ501AN	3.4/4.0	F	66.0/69.5	50,R1½	34.0	49/46-51	※BW32AAM-3P008	8			5-8
	VFZ601AN	4.2/5.5	F	67.5/70.5	63,R2	45.0	100/88-97	※BW32AAM-3P016	16	SW-5-1	TR-5-1N	12-18
	VFZ701AN	6.2/7.2	F	70.5/74.5	Rp2	62	146/125-136	※BW32AAM-3P024	24	SW-N1	TR-N2	18-26
	VFZ801AN	8.7/10.3	F	74.0/75.0	Rp2½	98	175/160-170	※BW32AAM-3P032	32	SW-N2		24-36
	VFZ901AN	13/15.5	F	76.0/79.5	Rp3	140	310/280-300	※BW63EAM-3P063	63	SW-N2S	TR-N3	34-50

1) Noise values measured in an unrestricted state at 1.5m.
2) Maximum values (output, power) and rated values (static pressure, flow) in Discharge characteristics are noted on the nameplate (stamped with *).
3) VFZ80 and VFZ90 types employ ⅄-△ (star delta) start.
4) Over-current protection for the auto-breaker (indicated by ※) is difficult for the breaker alone. Always use it as a restraint device.

	Model	Part code	Voltage (V)	Frequency (Hz)	Discharge characteristics					Intake characteristics		
					Maximum values			Rated values		Maximum values		
					*Output (kW)	*Current (A)	Static pressure (kPa)	*Static pressure (kPa)	*Flow (m³/min)	Output (kW)	Current (A)	Static pressure (kPa)
Non-standard voltage product	VFZ081A-4Z	VFZ1010	3φ 380 400 415 / 400 440	50／60	0.06/0.08	0.2-0.2-0.21/0.22-0.21	3.73/4.85	1.96	0.25/0.35	0.06/0.08	0.2-0.2-0.21/0.22-0.21	3.43/4.60
	VFZ101A-4Z	VFZ1011			0.09/0.12	0.26-0.26-0.27/0.31-0.3	5.15/6.37	2.94	0.35/0.50	0.09/0.12	0.26-0.26-0.27/0.31-0.3	4.90/6.21
	VFZ201A-4Z	VFZ1012			0.17/0.28	0.6-0.63-0.66/0.7-0.68	6.67/9.02	2.94	0.64/0.84	0.17/0.28	0.6-0.63-0.66/0.7-0.68	6.27/8.19
	VFZ301A-4Z	VFZ1013			0.28/0.42	0.86-0.9-0.95/0.95-0.9	9.32/12.4	3.92	0.9/1.1	0.28/0.42	0.86-0.9-0.95/0.95-0.9	8.73/11.4
	VFZ401A-4Z	VFZ1014			0.55/0.85	1.7-1.6-1.5/1.9-1.8	10.4/14.1	4.90	1.45/1.95	0.53/0.83	1.4-1.4-1.5/1.7-1.6	9.4/12.9
	VFZ501A-4Z	VFZ1015			1.3/1.9	2.6-2.7-2.8/3.7-3.4	14.7/19.6	6.86	2.4/3.0	1.3/1.9	2.6-2.7-2.8/3.7-3.4	13.7/17.3
	VFZ601A-4Z	VFZ1016			2.3/3.4	5.6-5.8-6/6.5-6.3	21.1/27.5	9.81	3.2/4.4	2.3/3.4	5.6-5.8-6/6.5-6.3	18.2/23.6
	VFZ701A-4Z	VFZ1117			3.3/5.0	8.1-8-8/10-9.5	21.6/28.4	9.81	4.4/5.7	3.1/5.4	7.6-7.5-7.5/10-9.5	18.3/22.9
	VFZ801A-4Z	VFZ1118			5.0/7.0	11-10.5-10/14-13	25.5/33.3	9.81	6.3/8.5	5.2/7.6	11-10.5-10/14-13	21.6/26.6
UL/CSA approved	VFC080P-5T	-	1φ 115／230	60	0.08	1.2/0.6	4.85	max.4.9	max.0.56	0.07	1.2/0.6	3.43/4.6
	VFC100P-5T	-			0.12	1.5/0.75	6.86	max.6.8	max.0.7	0.10	1.5/0.75	4.91/6.55
	VFC200P-5T	VFC1140			0.24	3.6/1.8	8.63	max.8.5	max.1.05	0.25	3.6/1.8	6.05/7.85
	VFC300P-5T	VFC1141			0.38	5.0/2.5	12.0	max.10.9	max.1.45	0.38	5.0/2.5	8.8/11.2
	VFC400P-5T	VFC1142			0.75	8.6/4.3	13.2	max.13.2	max.2.45	0.70	8.6/4.3	9.36/12.3
	VFC080A-2T（4W）	-	3φ, 200 230/(460)		0.08-0.08	0.42-0.40(0.21-0.20)	4.85	max.4.9	max.0.56	0.08-0.08	0.42-0.40(0.21-0.20)	3.43/4.60
	VFC100A-7W	-	3φ 200 230 / 460		0.112-0.12/0.12	0.53-0.52/0.26	6.37	max.6.4	max.0.7	0.112-0.12/0.12	0.53-0.52/0.26	4.90/6.21
	VFC200A-7W	-			0.25-0.28/0.28	1.2-1.2/0.6	9.02	max.9.0	max.1.1	0.25-0.28/0.28	1.2-1.2/0.6	6.27/8.19
	VFC300A-7W	VFC1147			0.35-0.42/0.42	1.5-1.7/0.85	12.4	max.12.4	max.1.45	0.35-0.42/0.42	1.5-1.7/0.85	8.73/11.4
	VFC400A-7W	VFC1148			0.75-0.82/0.82	3.3-2.8/1.4	14.1	max.14.0	max.2.5	0.75-0.82/0.82	3.3-2.8/1.4	9.4/12.9
	VFC500A-7W	VFC1149			1.9-1.9/1.9	6.9-6.2/3.1	19.6	max.18.4	max.4.0	1.9-1.9/1.9	6.9-6.2/3.1	13.7/17.3
	VFC600A-7W	VFC1150			3.1-3.4/3.4	12-11/5.5	27.5	max.25.5	max.5.5	3.1-3.4/3.4	12-11/5.5	18.2/23.6
	VFC700A-7W	VFC1152			4.1-5.0/5.0	15.6-16/8	28.4	max.25.1	max.7.2	4.1-5.0/5.0	15.6-16/8	18.3/22.9
	VFC804A-7W	-			6.5-7.5/7.5	26-23/11.5	33.3	max.29.0	max.10.3	6.5-7.5/7.5	26-23/11.5	21.6/26.6
	VFC904A-7W	-			13-15/15	48-44/22	31.4	max.27.9	max.15.5	13-15/15	48-44/22	21.4/27.6
Water-resistant type	VFC208Z	-	3φ 200 / 200 220	50／60	0.17/0.28	1.4/1.4-1.4	6.67/9.02	2.94	0.64/0.84	0.17/0.28	1.4/1.4-1.4	6.27/8.19
	VFC308Z	-			0.28/0.42	1.8/1.9-1.8	9.32/12.4	3.92	0.90/1.10	0.28/0.42	1.8/1.9-1.8	8.73/11.4
	VFC408Z	VFC1136			0.55/0.85	3.1/3.7-3.6	10.4/14.1	4.90	1.45/1.95	0.53/0.83	3.1/3.7-3.6	9.4/12.9
	VFC508Z	VFC1137			1.3/1.9	5.4/7.4-6.8	14.7/19.6	6.86	2.4/3.0	1.3/1.9	5.1/6.8-6.5	13.7/17.3
	VFC608Z	VFC1138			2.3/3.4	10/13-12	21.1/27.5	9.81	3.2/4.4	2.3/3.4	9.0/11-10.8	18.2/23.6
High volume flow	VFC318P	-	1φ, 100／100 110	50／60	0.24/0.38	5.0/5.8-5.6	2.84/4.02	2.84/4.02	1.6/1.8	0.24/0.38	4.6/5.8-5.6	2.84/4.02
	VFC318A	-	3φ, 200／200 220		0.26/0.44	1.8-2.0-1.9	2.84/4.02	2.84/4.02	1.8/2.0	0.26/0.44	1.8/2.0-1.9	2.84/4.02
High-pressure type	VFD308PB	-	1φ, 100／100 110	50／60	0.2/0.3	5.2/5.5-5.5	14.7/19.6	9.81	0.15/0.25	0.2/0.3	4.3/4.4-4.4	14.7/19.6
	VFD308AB	-	3φ, 200／200 220		0.25/0.38	1.7-1.8-1.7	16.7/23.5	9.81	0.15/0.25	0.25/0.38	2.0/1.8-1.7	15.7/21.0

	Model	Maximum discharge air flow (m³/min)	Heat-resistance class	Noise level (dB(A))	Inlet and outlet diameters (mm, inches)	Approximate mass (kg)	Starting current (A)	Auto-breaker		Solenoid switch	Thermal relay	
								Model	Rated current (A)		Model	Rated current (A)
Non-standard voltage product	VFZ081A-4Z	0.47/0.56	B	53.0/55.5	32	5.5	1.0-1.1-1.1/1.0-1.1	-	-	SW-03	TR-0N	0.24-0.36
	VFZ101A-4Z	0.58/0.69	B	52.5/56.5	32	7.5	2.0-2.1-2.1/1.9-2.1	-	-			0.24-0.36
	VFZ201A-4Z	0.90/1.09	B	57.5/62.0	32	9.0	3.6-3.9-4.0/3.4-3.7	BW32SAM-3P0P7	0.7			0.48-0.72
	VFZ301A-4Z	1.28/1.40	B	58.0/62.0	38	11.0	5.9-6.5-6.7/6.1-6.7	※BW32SAM-3P1P4	1.4			0.8-1.2
	VFZ401A-4Z	2.0/2.5	B	65.5/69.5	50,R1½	19.0	13.0-13.5-14.0/12.5-14.0	BW32SAM-3P002	2			1.4-2.2
	VFZ501A-4Z	3.4/4.0	F	70.5/74.5	50,R1½	27.5	23.3-24.5-25.5/23.0-25.5	BW32SAM-3P004	4			2.8-4.2
	VFZ601A-4Z	4.2/5.5	F	70.0/74.5	63,R2	43	47.5-50.0-52.0/44.0-48.5	※BW32SAM-3P008	8			5-8
	VFZ701A-4Z	6.2/7.2	F	75.0/79.5	Rp2	50	67-73-77/63-68	※BW32SAM-3P012	12			7-11
	VFZ801A-4Z	8.7/10.3	F	78.0/81.0	Rp2½	89	83-88-92/80-85	※BW32SAM-3P016	16			9-13
UL/CSA approved	VFC080P-5T	0.56	B	55.5	32	6.0	3.2/1.6	-	-	-	-	-
	VFC100P-5T	0.69	B	56.5	NPSC1	8.6	8.4/4.2	-	-	-	-	-
	VFC200P-5T	1.05	B	62.0	NPSC1	10.0	11.0/5.5	-	-	-	-	-
	VFC300P-5T	1.45	B	62.0	NPSC1¼	12.3	17.0/8.5	-	-	-	-	-
	VFC400P-5T	2.45	B	69.5	NPSC1½	23	24/12	-	-	-	-	-
	VFC080A-2T（4W	0.56	B	55.5	32	6.0	1.8-2.1(1.1)	-	-	-	-	-
	VFC100A-7W	0.69	B	56.5	NPSC1	8.6	2.0-2.4/1.2	-	-	-	-	-
	VFC200A-7W	1.09	B	62.0	NPSC1	10.0	5.2-6.0/3.0	-	-	-	-	-
	VFC300A-7W	1.4	B	62.0	NPSC1¼	11.5	7.2-8.0/4.0	-	-	-	-	-
	VFC400A-7W	2.5	B	69.5	NPSC1½	21.5	15.0-16.5/9.2	-	-	-	-	-
	VFC500A-7W	4.0	B	74.5	NPSC1½	32	44-52/26	-	-	-	-	-
	VFC600A-7W	5.5	B	74.5	NPSC2	52	78-90/45	-	-	-	-	-
	VFC700A-7W	7.2	F	79.5	NPSC2	82	110-115/58	-	-	-	-	-
	VFC804A-7W	10.3	B	81.0	NPSC2½	130	144-160/80	-	-	-	-	-
	VFC904A-7W	15.5	B	83.0	NPSC3	205	290-330/165	-	-	-	-	-
Water-resistant type	VFC208Z	0.90/1.09	E	63.0/65.5	32	11.0	9.0/8.1-9.0	BW32AAM-3P1P4	1.4	SW-03	TR-0N	0.95-1.45
	VFC308Z	1.28/1.40	E	65.0/68.0	38	12.5	13.0/12.0-13.5	BW32AAM-3P2P6	2.6			1.7-2.6
	VFC408Z	2.0/2.5	B	74.0/79.0	50,R1½	21	27.0/25.0-27.5	BW32AAM-3P004	4			2.8-4.2
	VFC508Z	3.4/4.0	B	80.0/84.0	50,R1½	33	55/52-57	※BW32AAM-3P008	8			5-8
	VFC608Z	4.2/5.5	B	81.0/85.0	63,R2	50	98/89-98	※BW32AAM-3P016	16	SW-5-1	TR-5-1N	12-18
High volume flow	VFC318P	2.8/3.3	E	70.0/72.0	Rp1½	18	18.5/17.5-19.5	※BW32SAM-2P008	8	SW-03	TR-0N	5-8
	VFC318A	2.8/3.3	E	70.0/72.0	Rp1½	17	13/12-13.5	BW32SAM-3P002	2			1.7-2.6
High-pressure type	VFD308PB	0.48/0.58	E	57.0/61.0	Rp1	15	18.5/17.5-19.5	※BW32SAM-2P008	8	SW-03	TR-0N	4-6
	VFD308AB	0.5/0.6	E	57.0/61.0	Rp1	14.5	13/12-13.5	BW32SAM-3P002	2			1.7-2.6

1) Noise values measured in an unrestricted state at 1.5m.
2) Maximum values (output, power) and rated values (static pressure, flow) in Discharge characteristics are noted on the nameplate (stamped with *).
3) VFZ80 and VFZ90 types employ ⅄-△ (star delta) start.
4) UL/CSA approved products are usable at 50Hz, however startup current increases by 30% at 60 Hz. Characteristics are also degraded at 50 Hz.
5) Over-current protection for the auto-breaker (indicated by ※) is difficult for the breaker alone. Always use it as a restraint device.

General selection diagram

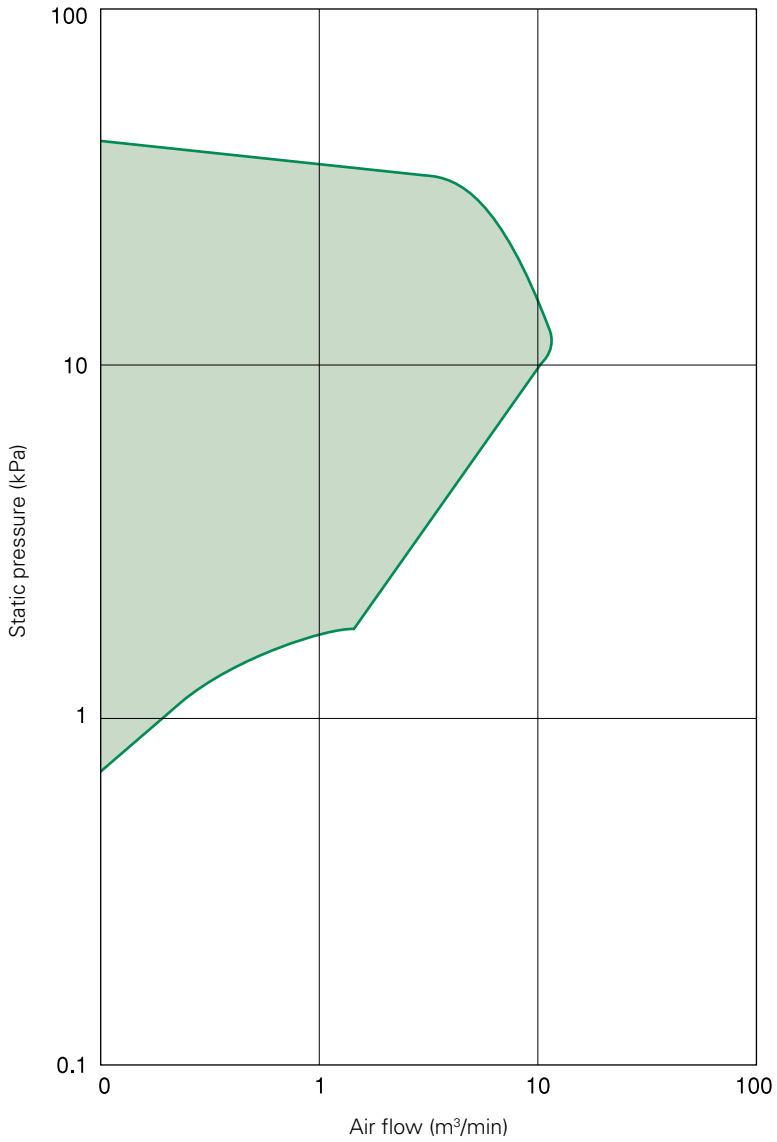

Ring blower

VFZ

VFC

Selection diagrams

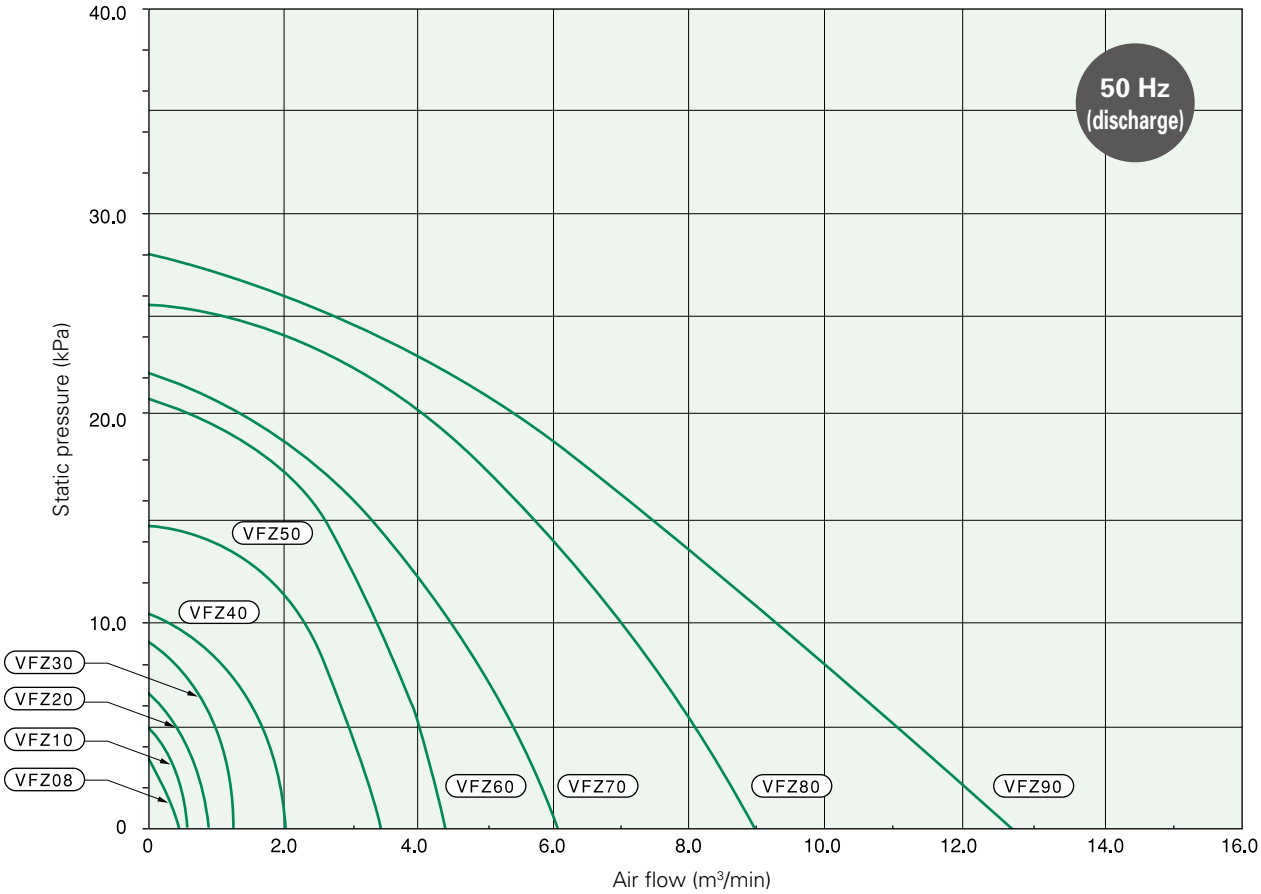

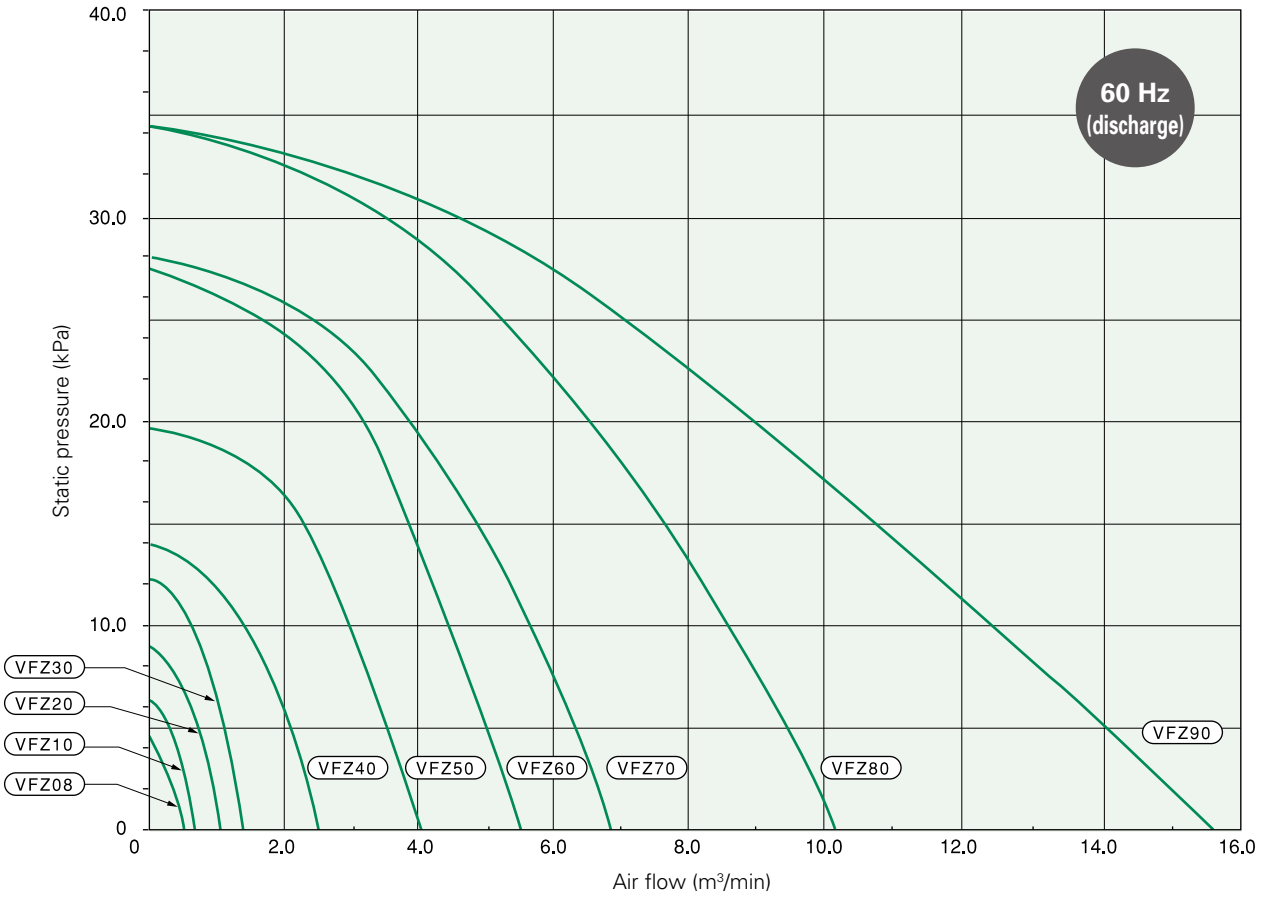

Note: The above values are VFZ Series discharge characteristics. Check intake characteristics for each product.

Printing machinery

For gripping (negative pressure) / For discharge (positive pressure)

Dry copier

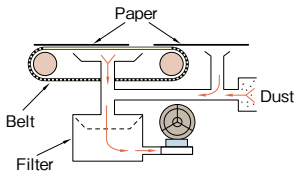

Gripping paper and collection of waste within machine.

Recommended type: 40-60 type

Roller gripping

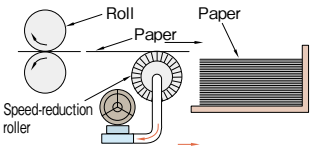

Gripped and held by speed-reduction roller before stacking paper printed on high-speed copiers.

Recommended type: 40-60 type

Bookbinding machine

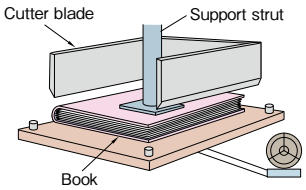

Gripped while cutting.

Recommended type: 20-60 type

Gripping paper

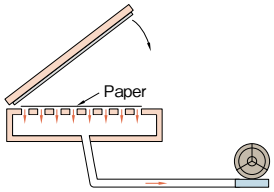

Paper gripped and held to prevent slippage.

Recommended type: 20-40 type

Paper feed

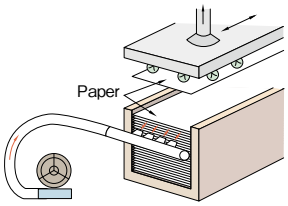

Air blown between sheets of paper to produce a gap, and paper then gripped for transport.

Recommended type: 20-60 type

Recovery of cut-off edges

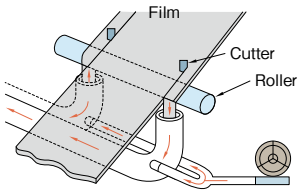

Recovery of cut-off edges of tape and paper.

Recommended type: 40-60 type

Paper aligned automatically

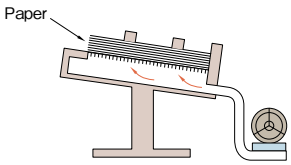

Positioning of printed paper and binding paper.

Recommended type: 20-50 type

Positioning of paper (1)

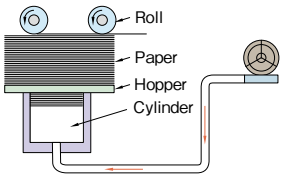

Hopper pushed up to maintain height of paper.

Recommended type: 08-30 type

Positioning of paper (2)

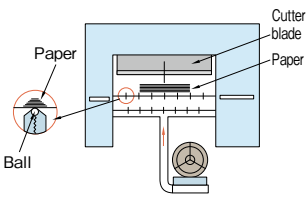

Positioning of paper for cutting, and air cushion for movement.

Recommended type: 20-40 type

Drying of paper

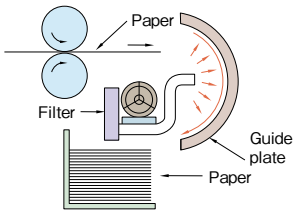

Drying printed paper.

Recommended type: 30-60 type

Paper feed (1)

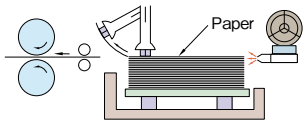

Air blown between sheets of paper to prevent simultaneous feed of multiple sheets.

Recommended type: 20-40 type

Paper feed (2)

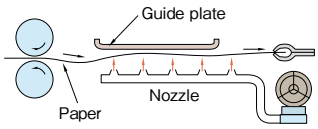

Paper suspended on air blown from the nozzle, preventing contamination of the printed surface.

Recommended type: 40・50 type

Drying of paper in storage

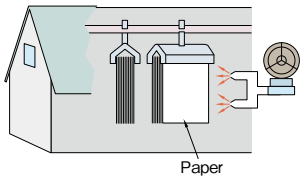

Drying of paper in storage chamber.

Recommended type: 40-60 type

Drying of photographic paper

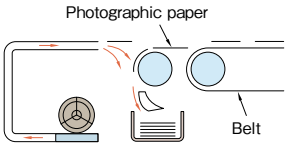

Drying of photographic paper.

Recommended type: 10-40 type

Dry sprayer

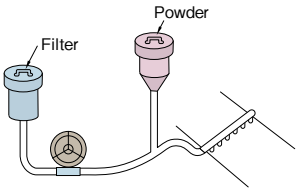

Powder dispersed into wet printing unit, and dried to prevent adherence of dust, and to prevent scuffing of text.

Recommended type: 10・20 type

Note: The above recommended types are all based on examples delivered by the manufacturer.

Transport equipment

For gripping (negative pressure) For discharge (positive pressure)

Hopper loader

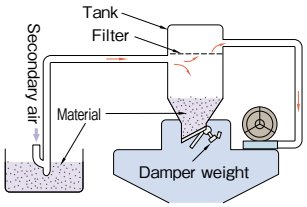

Transport of material (e.g. PVC, polyethylene, plastic resin).

Recommended type: 40-90 type

Transport of granular solids

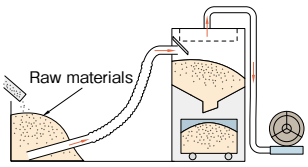

Transport of raw materials (e.g. rice, wheat, soybeans, powder, bean curd refuse, almonds, senbei cracker materials).

Recommended type: 40-60 type

Sludge recovery equipment

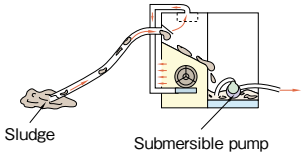

Recovery of sludge with shield method.

Recommended type: —

Card feed (1)

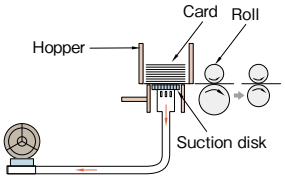

Card gripping feed.

Recommended type: 08-30 type

Card feed (2)

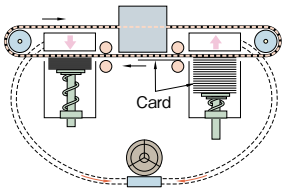

Cards gripped by suction through holes in belt during transport.

Recommended type: 30・40 type

Air lift (1)

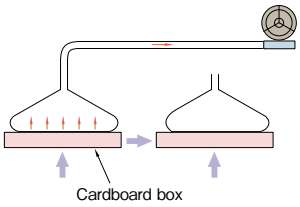

Gripping of items by suction for transport.

Recommended type: 08-60 type

Air lift (2)

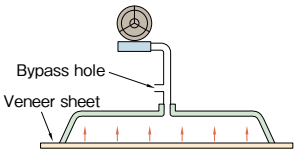

The large air flow allows stable gripping of large items.

Recommended type: 40-60 type

Transport of mixtures of water and granular material

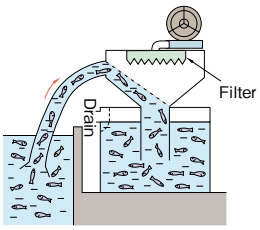

Recovery of small fish etc.

Recommended type: 40-90 type

Transport of granular solids

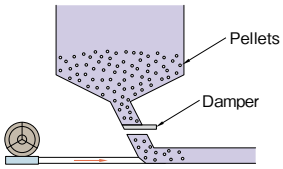

Air conveyance of pellet-type raw materials (e.g. PVC and polyethylene pellets).

Recommended type: 40-90 type

Transport of cereals

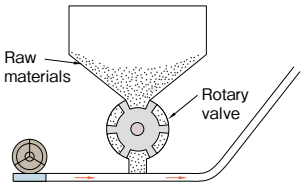

Air conveyance of raw materials (e.g. wheat) dropped in discrete amounts using a rotary valve.

Recommended type: 40-70 type

Golf ball feed

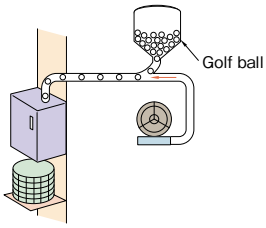

Feeding golf balls.

Recommended type: 30-50 type

Mixing in hopper

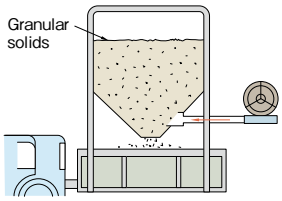

Air forced into hopper to eliminate bridging with granular solids.

Recommended type: 40-60 type

Note: The above recommended types are all based on examples delivered by the manufacturer.

Food machinery

For gripping (negative pressure) For discharge (positive pressure)

Automatic bottle filling machinery

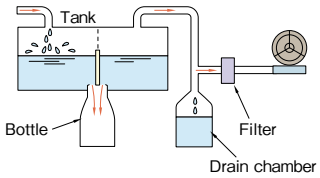

Generates negative pressure during packing.

Recommended type 20-50 type

Sausage skin peeler

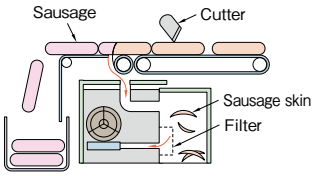

Grip by suction to ensure effective peeling, and collect peeled skins.

Recommended type 60 type

Food processing equipment

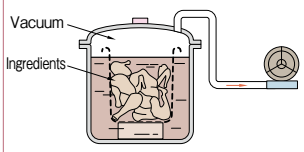

Vacuum impregnation for flavoring of ingredients.

Recommended type 40-60 type

Filling cardboard milk cartons

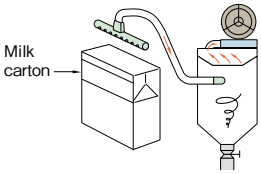

Removal of bubbles by suction when filling milk cartons.

Recommended type 20 type

Automatic equipment for aligning senbei cracker materials

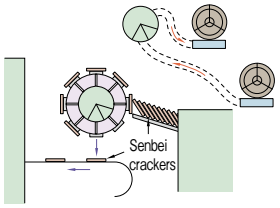

Automatic alignment in senbei cracker baking equipment.

Recommended type —

Caramel candy packing equipment

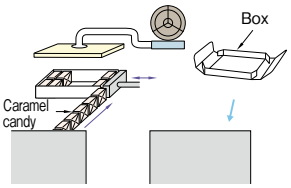

Caramel candy packing equipment.

Recommended type 40 type

Dried laver seaweed peeling equipment

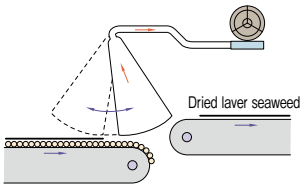

Suction for peeling dried laver seaweed from drainage slats.

Recommended type 40-60 type

In combination with press

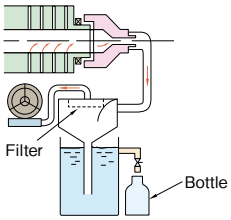

Suction removal of liquid during squeezing.

Recommended type 40・50 type

Dried laver seaweed pick-and-place

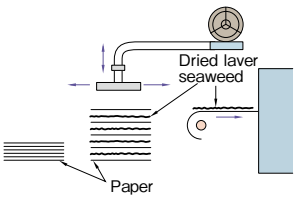

Source of suction for gripping dried laver seaweed.

Recommended type —

Ramen noodle manufacturing equipment

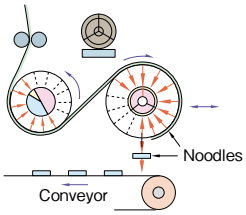

Suction and blowing of noodle raw materials.

Recommended type —

Fruit peeling equipment

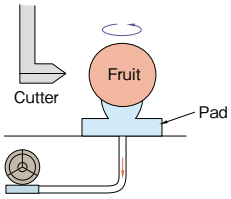

Gripping and holding fruit.

Recommended type 20・30 type

Filling vegetable packs

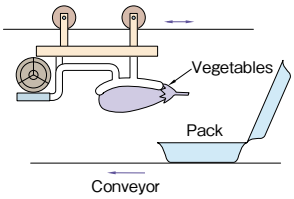

Filling vegetable packs.

Recommended type —

Transport of granular solids

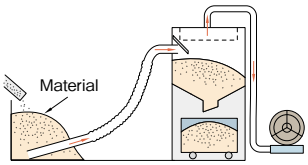

Transport of raw materials (e.g. rice, wheat, soybeans, powder, bean curd refuse, almonds, senbei cracker materials).

Recommended type 40-60 type

Tofu manufacturing equipment

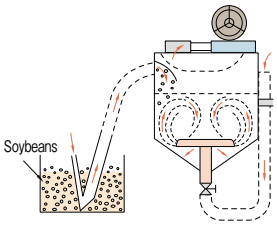

Soybeans transported by suction. Switched to blowing for cleaning.

Recommended type —

Bottle washing equipment

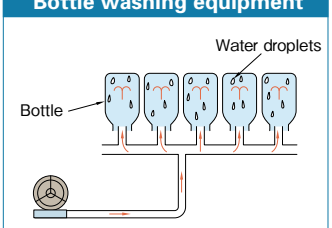

Removal of water droplets in bottles after washing.

Recommended type 40-60 type

Bottling and assembly lines

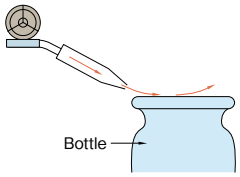

Blowing water droplets from bottles.

Recommended type —

Note: The above recommended types are all based on examples delivered by the manufacturer.

Food machinery

For gripping (negative pressure) For discharge (positive pressure)

Automatic tank washing equipment

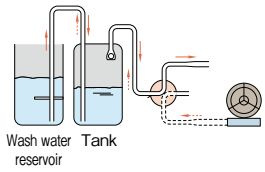

Automatic washing inside tank with air mixing.

Recommended type —

Pack drying

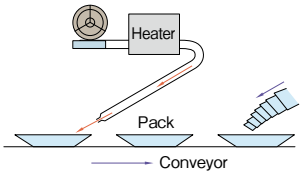

Drying packs with hot air.

Recommended type 40-60 type

Ham processing equipment

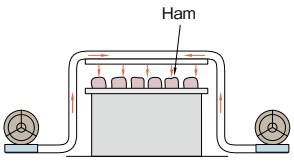

Blowing water droplets off hams.

Recommended type 40-60 type

Ramen noodle processing line

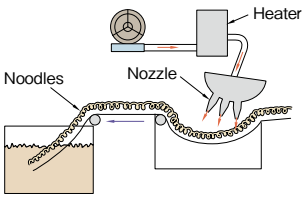

Removal of oil from ramen noodles using hot air.

Recommended type —

Spaghetti processing equipment

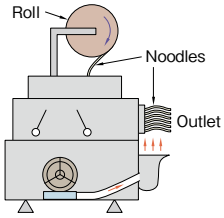

Preventing sticking of spaghetti.

Recommended type —

Vegetable washing equipment

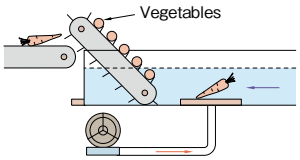

Aeration when washing vegetables.

Recommended type 40・50 type

Fruit washing equipment

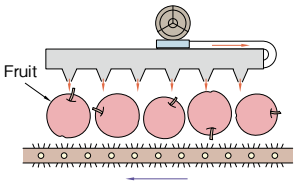

Removal of water droplets from washed fruit.

Recommended type —

Note: The above recommended types are all based on examples delivered by the manufacturer.

Textile equipment

For gripping (negative pressure) For discharge (positive pressure)

Lint recovery (1)

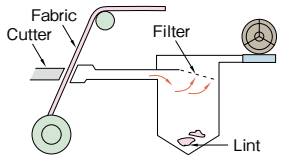

Recovery of fabric off-cuts and lint produced during trimming.

Recommended type 20-60 type

Lint recovery (2)

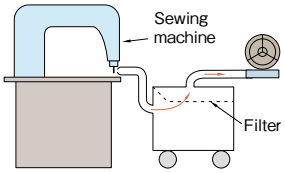

Recovery of lint produced during industrial sewing machine operation.

Recommended type 08-20 type

Sock knitting machine

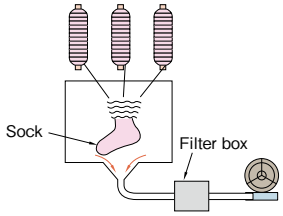

Gripping of socks, and preventing sagging and non-uniform knitting.

Recommended type 20-40 type

Automatic loom

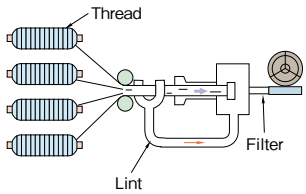

Gripping thread before it reaches the weaving machinery, and removal of cotton and lint.

Recommended type 20-40 type

Twining

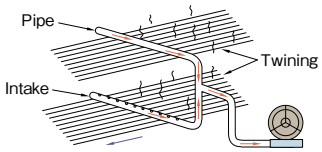

Removal of soot produced in the process of twining

Recommended type 30・40 type

Loom

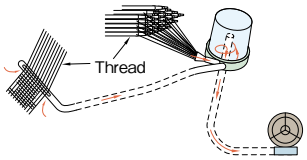

Woof air tensioning, and recovery of lint.

Recommended type 30 type

Automatic loom

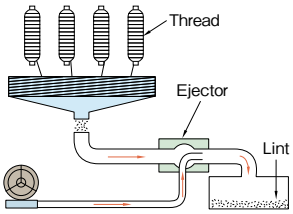

Application of air tension to the woven product to facilitate weaving, and simultaneous waste collection.

Recommended type 20-40 type

Circular knitting machine

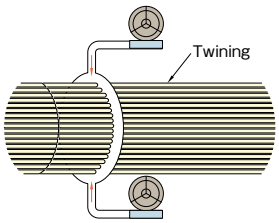

Pipes arrayed in a circle around the part through which twining is passed to blow cotton waste away during knitting.

Recommended type 20-40 type

Note: The above recommended types are all based on examples delivered by the manufacturer.

Packaging equipment

For gripping (negative pressure) For discharge (positive pressure)

Plastic film processing

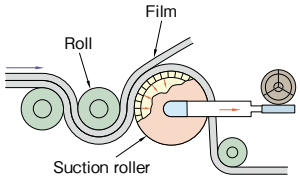

Gripping plastic film with suction roller.

Recommended type 20-60 type

Label applicator equipment

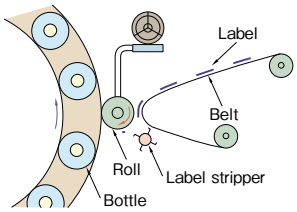

Labels held on roll, and applied to bottles etc.

Recommended type 10-30 type

Automatic packaging equipment

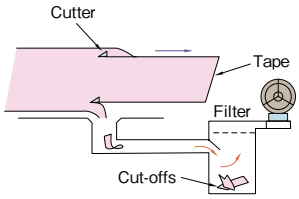

Removal of tape cut-offs.

Recommended type 30・40 type

Hole puncher

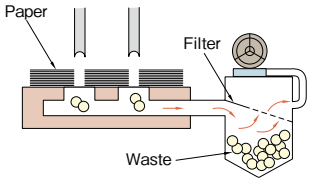

Collection of waste from hole puncher in filter box.

Recommended type 08-30 type

Vertical packaging equipment

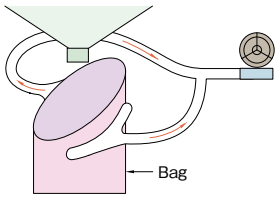

Opening and gripping bags.

Recommended type 20-40 type

Horizontal packaging equipment

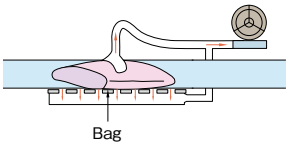

Opening and gripping bags.

Recommended type 20-40 type

Automatic packaging equipment

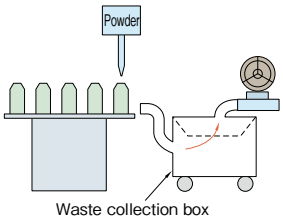

Collection of waste (e.g. particles) from table of automatic packaging machine.

Recommended type 20-60 type

Cardboard packaging

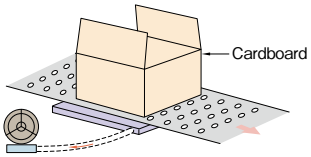

Preventing displacement of, and gripping, cardboard.

Recommended type 40-60 type

Vacuum forming equipment

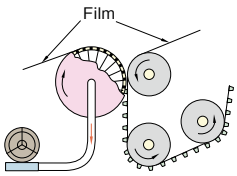

Film formation.

Recommended type —

Dry cleaning packaging

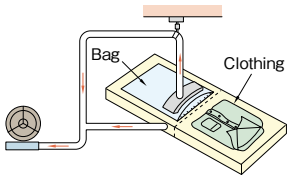

Opening and gripping dry cleaning bags.

Recommended type 20-40 type

Note: The above recommended types are all based on examples delivered by the manufacturer.

Machine tools

For gripping (negative pressure) For discharge (positive pressure)

Welder

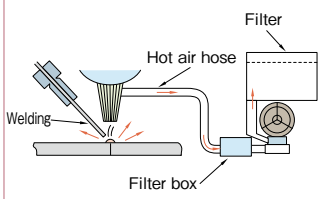

Removal of smoke, heat and fumes during welding work.

Recommended type: 40 type

Gripping work

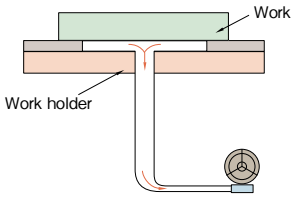

Gripping non-magnetic materials such as timber and plastic.

Recommended type: 80・90 type

Laminating press

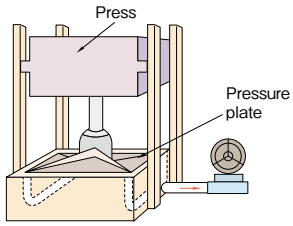

Removal of excess air on surface of pressure plate before lamination.

Recommended type: 40-60 type

Dehydrator

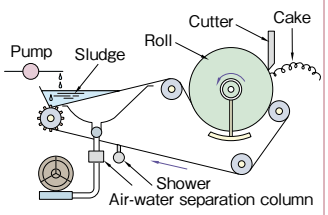

Vacuum dehydration of sludge.

Recommended type: 80・90 type

Swarf removal

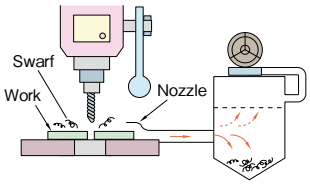

Collection of swarf produced during machining operations.

Recommended type: 30-60 type

Press

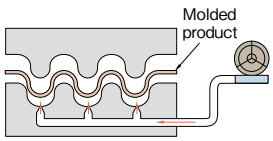

Removal of molded products from mold.

Recommended type: 40-60 type

Grinder

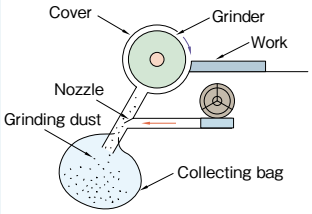

Suction to collect grinding dust.

Recommended type: 20-50 type

Cutting oil mister

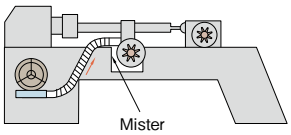

Source of pressure to generate cutting oil mist.

Recommended type: 30-50 type

Note: The above recommended types are all based on examples delivered by the manufacturer.

Plant and machinery

For gripping (negative pressure) For discharge (positive pressure)

Construction site

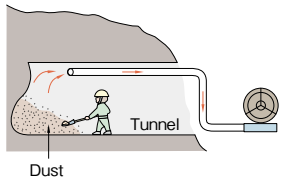

Localized removal of dust and toxic gases from construction sites in restricted spaces such as tunnels.

Recommended type: —

Water uptake pump

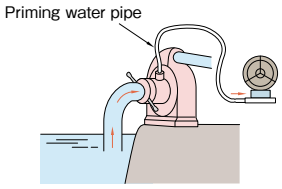

Priming water for water pump.

Recommended type: —

Automobile exhaust gas detection equipment

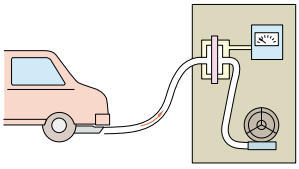

Testing of automobile exhaust gas.

Recommended type: —

Vacuum dehydration

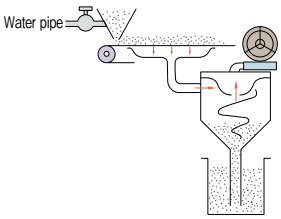

Vacuum dehydration of silica sand.

Recommended type: 60-80 type

Filter

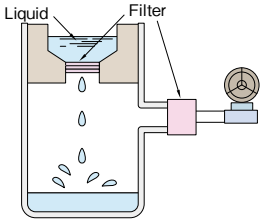

Reduce filtering time.

Recommended type: 40-60 type

Extraction of plating gases

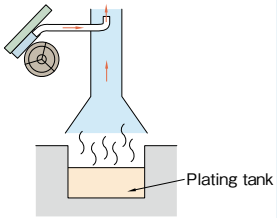

Extraction of plating gases.

Recommended type: 50 type

Car washing equipment

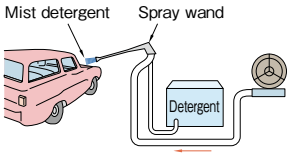

Produces a mist of water and detergent.

Recommended type: —

Cleaning tank

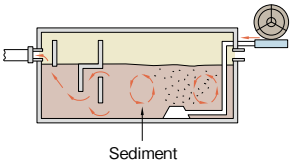

Mixing of sediment, and aeration of comparatively shallow water treatment plants.

Recommended type: 50-90 type

Freezing prevention

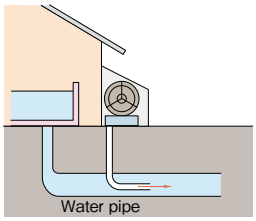

Prevention of freezing in water piping.

Recommended type: 40-60 type

Drying line

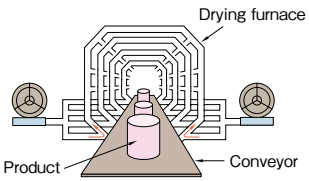

Small-scale drying lines.

Recommended type: —

Mold cleaning equipment

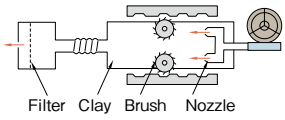

Blows clay removed from surfaces of the tile mold by rotation of the brushes.

Recommended type: 40-60 type

Sand blasting

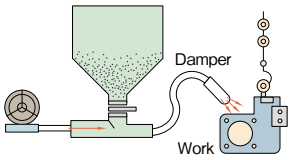

Air source for blasting.

Recommended type: 60-90 type

Painting line

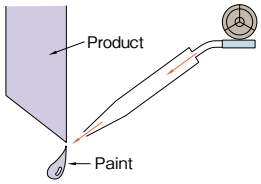

Blowing to prevent paint drips on finished surfaces.

Recommended type: —

Cleaning piping

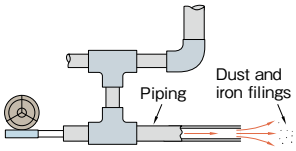

Removal of dust and iron filings produced during replacement and periodic inspection of piping.

Recommended type: 40-60 type

Gas burner

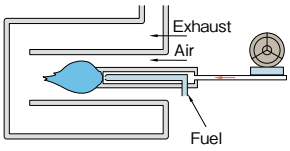

Atomization of fuel.

Recommended type: 50・60 type

Air brush

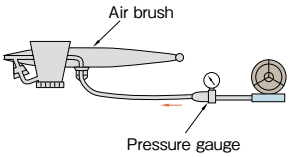

High-pressure air free of oil is highly desirable for air-brushing.

Recommended type: 60-80 type

Note: The above recommended types are all based on examples delivered by the manufacturer.

Plant and machinery

For gripping (negative pressure) For discharge (positive pressure)

Spray

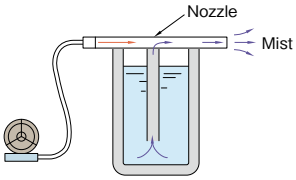

Source of high-pressure air free of oil for spraying.

Recommended type 40-60 type

Plating tank

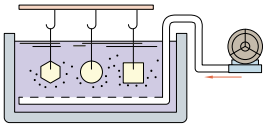

Air blown into the tank to remove bubbles from electrolyte and thus improve plating quality.

Recommended type 30-50 type

Plating tank

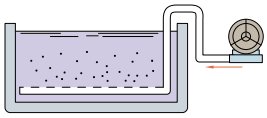

Maintains temperature of plating fluid, and prevents separation of cutting fluid.

Recommended type 20・30 type

Plating line

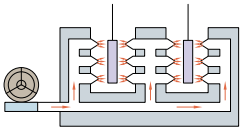

Blows away water droplets following plating, reducing energy consumption during drying.

Recommended type 50・60 type

Note: The above recommended types are all based on examples delivered by the manufacturer.

Forestry and fishing machinery

For gripping (negative pressure) For discharge (positive pressure)

Egg packing

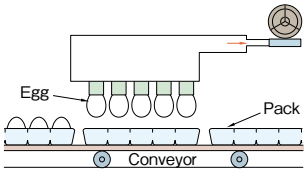

Gripping and placing eggs in packs.

Recommended type: 20-40 type

Vegetable packaging

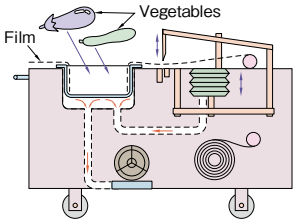

Forming and cutting of vegetable packaging film.

Recommended type: 20 type

Transport of granular solids

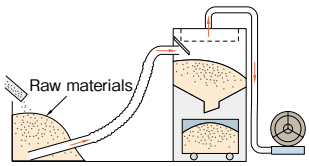

Transport of raw materials (e.g. rice, wheat, soybeans, powder, bean curd refuse, almonds, senbei cracker materials).

Recommended type: 40-60 type

Milking machinery

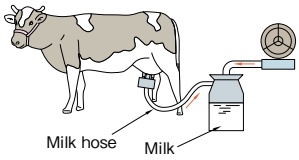

Dairy milking.

Recommended type: 30・40 type

Gripping and transport for rice bagging

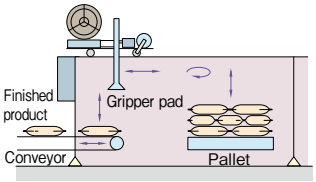

Gripping and transport for rice bagging and stacking.

Recommended type: 60 type

Transport of mixtures of water and granular material

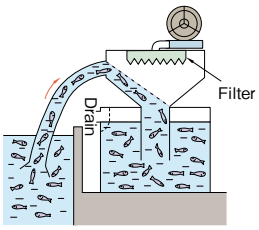

Recovery of small fish etc.

Recommended type: 40-90 type

Fruit peeling equipment

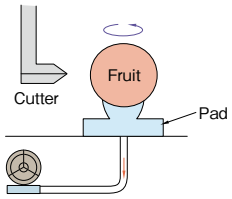

Gripping and holding fruit.

Recommended type: 20・30 type

Filling vegetable packs

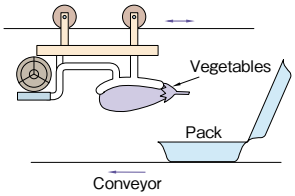

Gripping and packing vegetables.

Recommended type: —

Transport of cereals

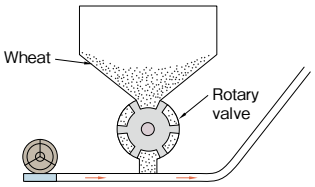

Air conveyance of wheat dropped in discrete amounts using a rotary valve.

Recommended type: 40-70 type

Fermentation of animal waste

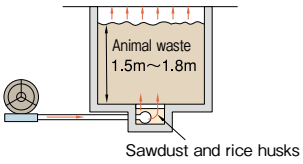

Promotion of animal waste fermentation.

Recommended type: —

Fruit washing equipment

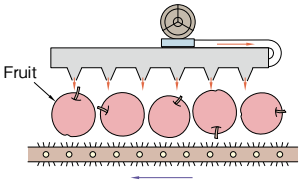

Removal of water droplets from washed fruit.

Recommended type: —

Egg washing equipment

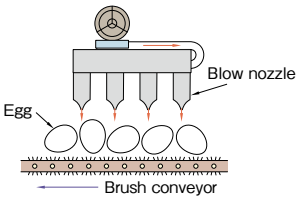

Automatic egg washing.

Recommended type: 80 type

Vegetable washing equipment

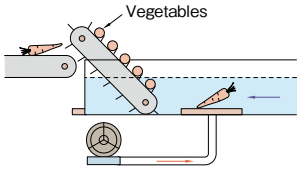

Aeration when washing vegetables.

Recommended type: 40・50 type

Supplementary oxygen for fish breeding ponds

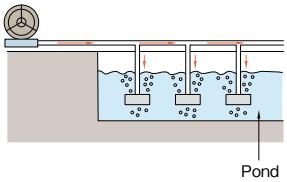

Supplementary dissolved oxygen for fish breeding ponds.

Recommended type: 30-60 type

Note: The above recommended types are all based on examples delivered by the manufacturer.

Medical and welfare equipment

For gripping (negative pressure) For discharge (positive pressure)

Dental equipment

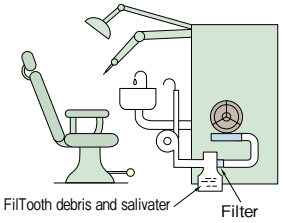

Removal of tooth debris and saliva produced during dental work.

Recommended type 30・40 type

Therapeutic baths

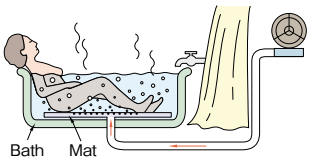

Aeration in bath.

Recommended type 20-60 type

Respiration equipment

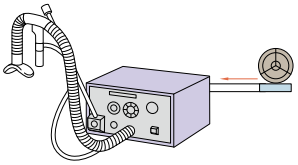

Prevention of irregular respiration, and assisting respiration.

Recommended type 08-20 type

Massage equipment

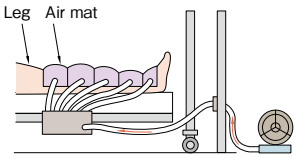

Vibration of air mat promotes circulatory function within the skin.

Recommended type 30・40 type

Humidifier (mist generated within enclosure)

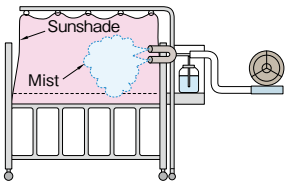

Humidification of pediatric bed by misting within curtained enclosure.

Recommended type 30-60 type

Air bed

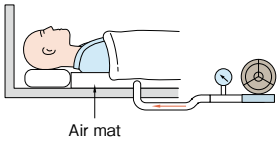

Body support and protection for burn victims and bedridden patients.

Recommended type 20-40 type

Note: The above recommended types are all based on examples delivered by the manufacturer.

Other

For gripping (negative pressure) For discharge (positive pressure)

Leak tester

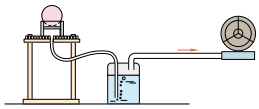

Seal testing.

Recommended type —

Vacuum filter

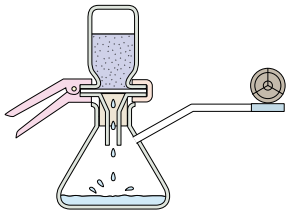

Rapid filtering by vacuum.

Recommended type —

Chemical testing equipment

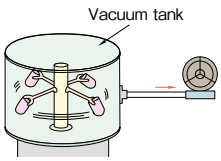

Vacuum tank for chemical testing equipment.

Recommended type —

Stain remover

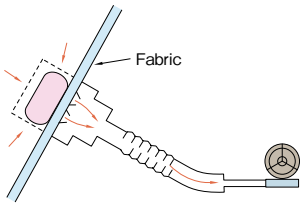

Removal of moisture in fabric.

Recommended type 08-30 type

Clothing press

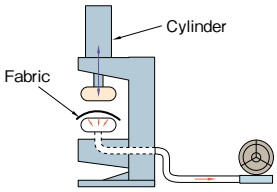

Removal of steam by suction.

Recommended type —

Exhaust gas detection equipment

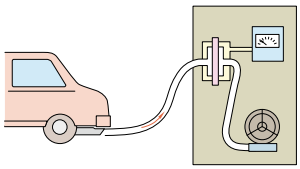

Employed in automobile exhaust gas testing equipment.

Recommended type —

Clean room

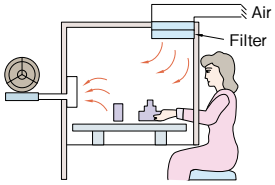

Localized ventilation in clean rooms.

Recommended type 40-60 type

Flame cutter

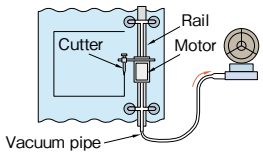

Gripping and holding cutters for glass and plastic materials.

Recommended type —

Gas decomposition equipment

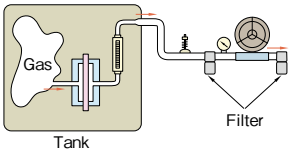

Suction source for gas spectrometer.

Recommended type —

Note: The above recommended types are all based on examples delivered by the manufacturer.

Ring blower
Single phase standard type(low-noise model)

VFZ-PN model

■Features

- ●Complies with EU RoHS directive standard
- ●Fully enclosed intake operation
- ●Low-noise construction

■Paint color

Munsell 2.5Y5/1

■Model description

V F Z ○○1 P N

- Specifications (single phase standard type)
- Model
- Capacity (08～40)

Model:VFZ101PN

■Dimensional outline drawing and characteristic

VFZ081PN

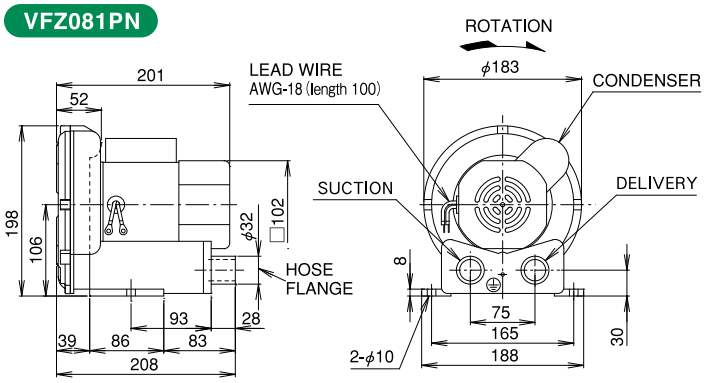

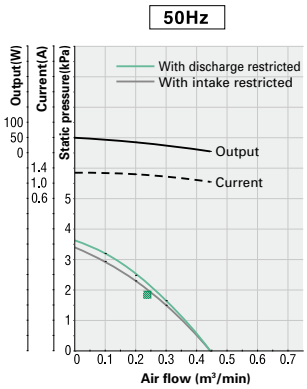

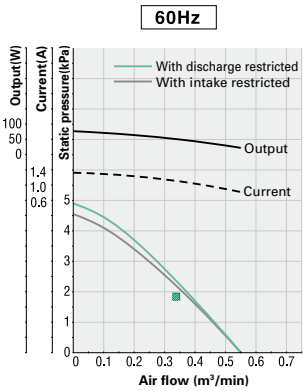

VFZ101PN

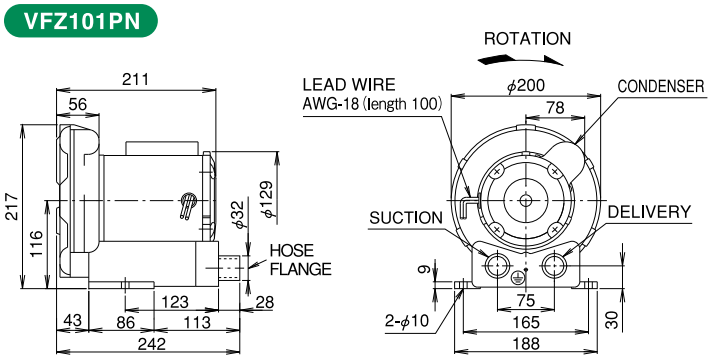

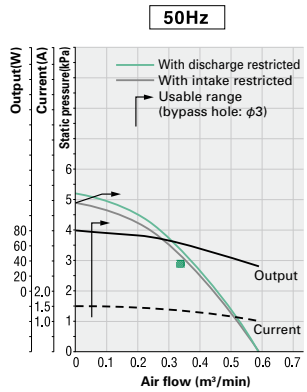

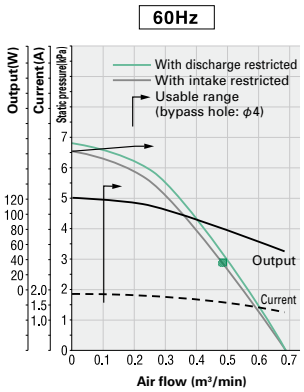

Note 1:The above values are obtained in a thermally saturated state. Depending on the model, characteristics near cut-off (static pressure, current, output) are therefore 0 – 20% higher at ambient temperature due to air density.

Note 2: ▨ noted with characteristics above are values on the name plate (flow and static pressure only). Current and output values indicated are limits for continuous use.

Dimensional outline drawing and characteristic

VFZ201PN

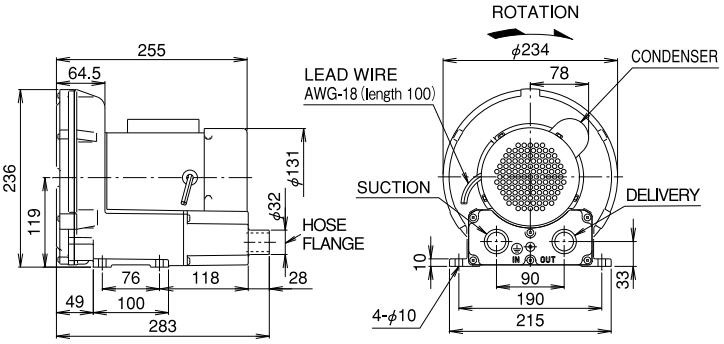

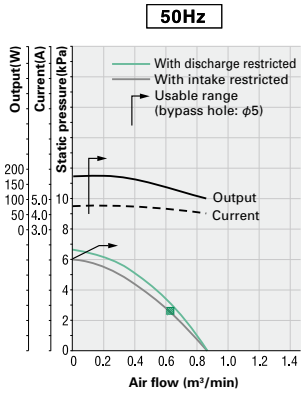

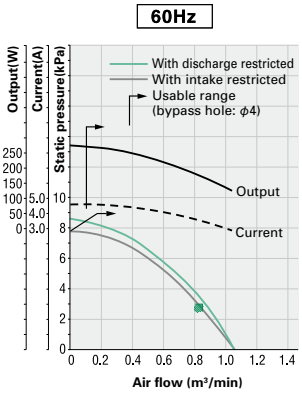

VFZ301PN

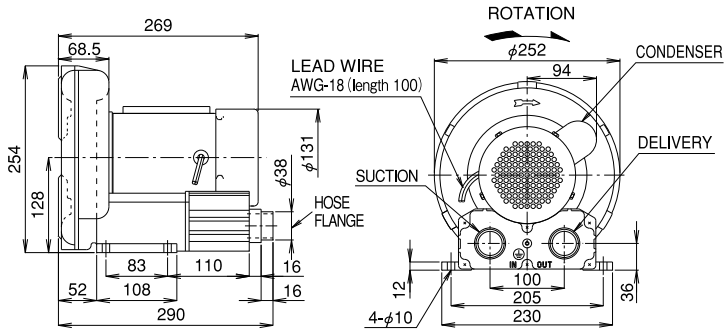

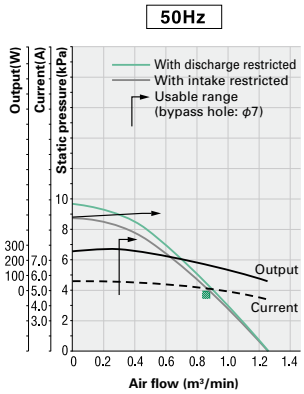

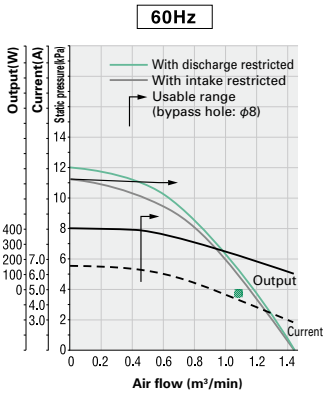

VFZ401PN

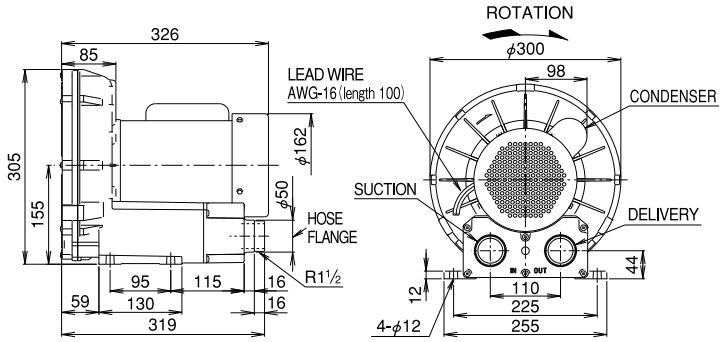

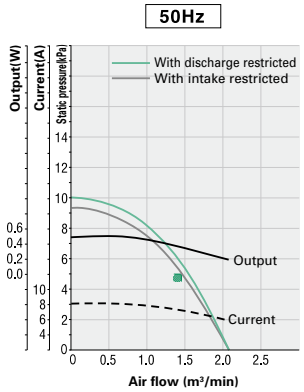

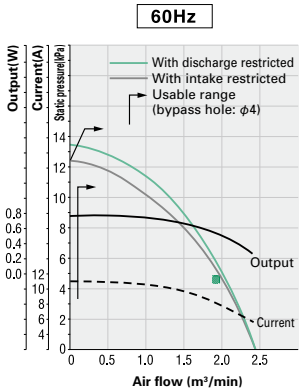

Note 1: The above values are obtained in a thermally saturated state. Depending on the model, characteristics near cut-off (static pressure, current, output) are therefore 0 – 20% higher at ambient temperature due to air density.

Note 2: ▨ noted with characteristics above are values on the name plate (flow and static pressure only). Current and output values indicated are limits for continuous use.

Ring blower
3-phase standard type, non-standard voltage product **VFZ-A model** (08～60type)

Features

- **Complies with EU RoHS directive and CE marking standard**
- **For fully enclosed intake operation (50 and 60 types)**

  Caution
  Always remove the emblem on the main unit before installation with fully enclosed intake applications.
  Operation without removing the emblem may result in deterioration of the motor insulation.
- **Design eliminates oil seals in the blower (40 – 60 types)**
- **International Class IP54 protection (for motor)**

Model:VFZ501A

Paint color

Munsell 2.5Y5/1

Piping

For A and A-4 hoses

Model description

V F Z ○○1 □

- Capacity (08～60)
- Model
- Specifications
  - A: 3-phase standard type (for hoses)
  - A-4Z: 3-phase, non-standard voltage product

Dimensional outline drawing and characteristic

VFZ081A **VFZ081A-4Z**

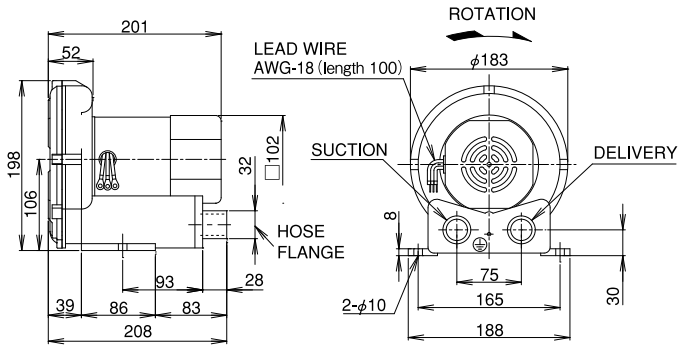

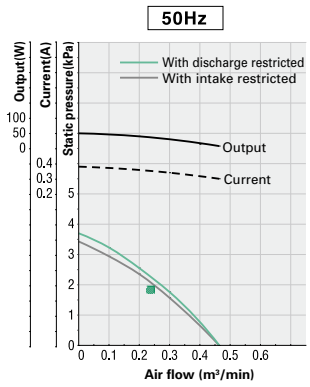

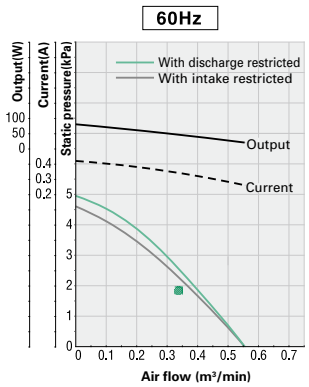

Note 1: The above values are obtained in a thermally saturated state. Depending on the model, characteristics near cut-off (static pressure, current, output) are therefore 0 – 20% higher at ambient temperature due to air density.
Note 2: ▨ noted with characteristics above are values on the name plate (flow and static pressure only). Current and output values indicated are limits for continuous use.
Note 3: Check 'Standard Specifications' for current values for non-standard voltage products (-4Z).

Dimensional outline drawing and characteristic

VFZ101A **VFZ101A-4Z**

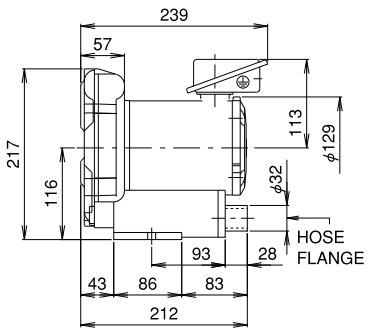

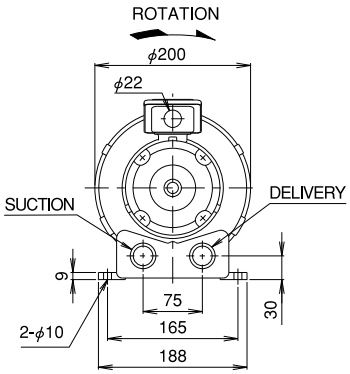

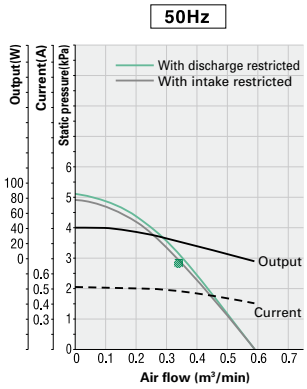

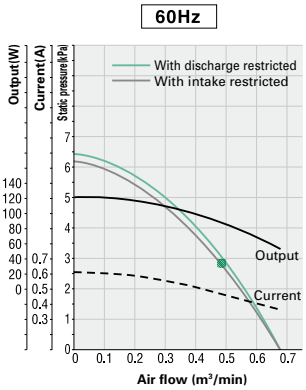

VFZ201A **VFZ201A-4Z**

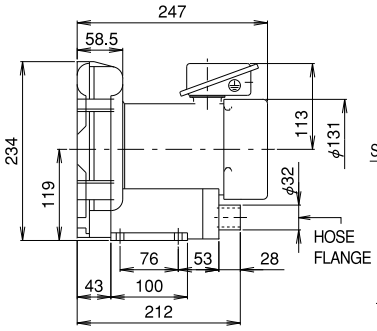

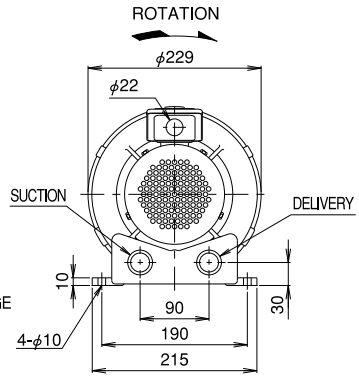

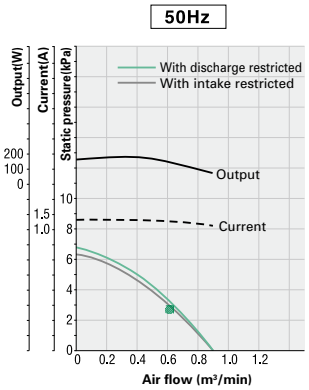

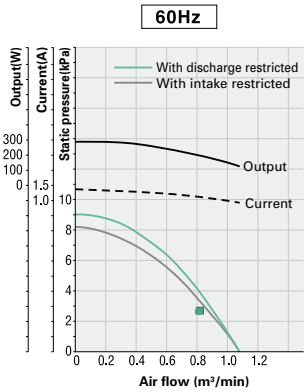

VFZ301A **VFZ301A-4Z**

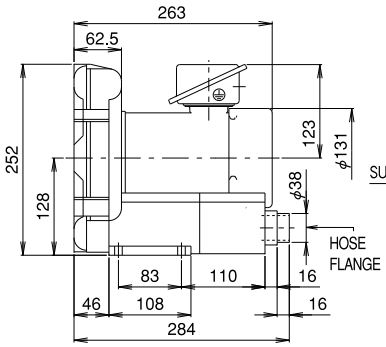

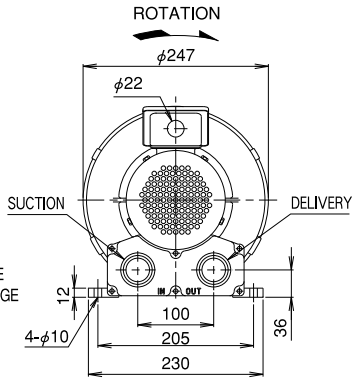

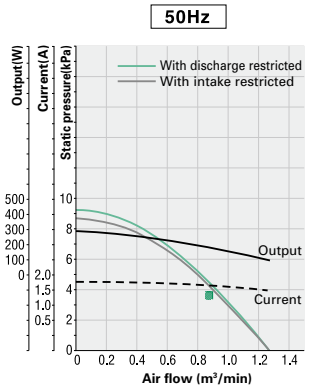

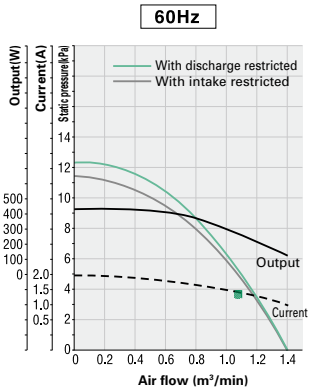

VFZ401A **VFZ401A-4Z**

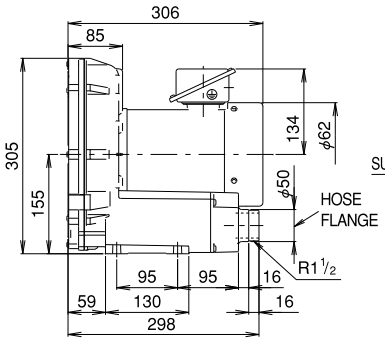

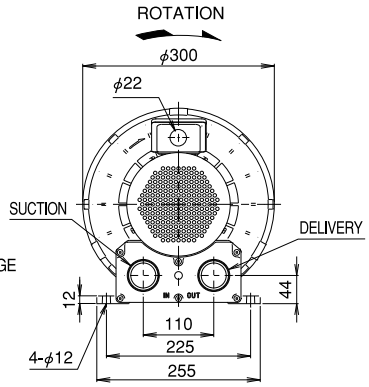

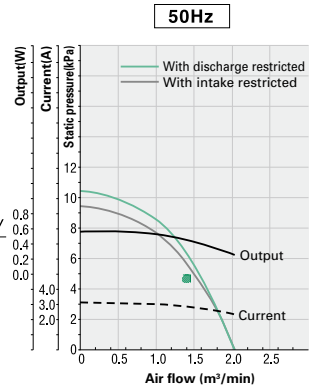

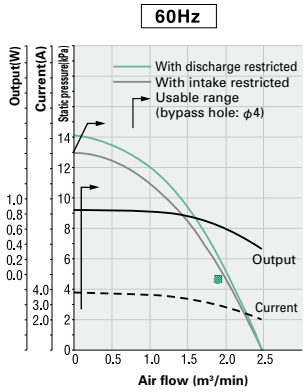

Note 1: The above values are obtained in a thermally saturated state. Depending on the model, characteristics near cut-off (static pressure, current, output) are therefore 0 – 20% higher at ambient temperature due to air density.
Note 2: ▨ noted with characteristics above are values on the name plate (flow and static pressure only). Current and output values indicated are limits for continuous use.
Note 3: Check 'Standard Specifications' for current values for non-standard voltage products (-4Z).

■Dimensional outline drawing and characteristic

VFZ501A **VFZ501A-4Z**

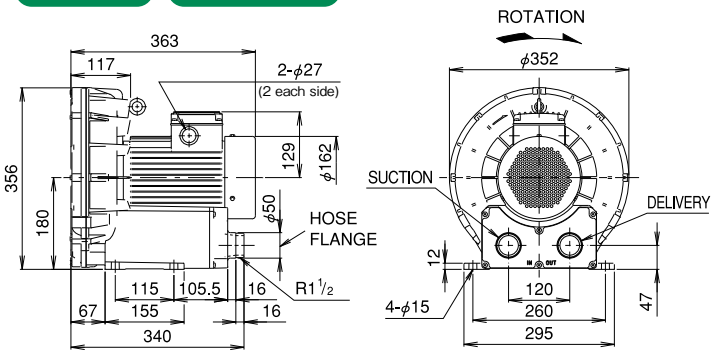

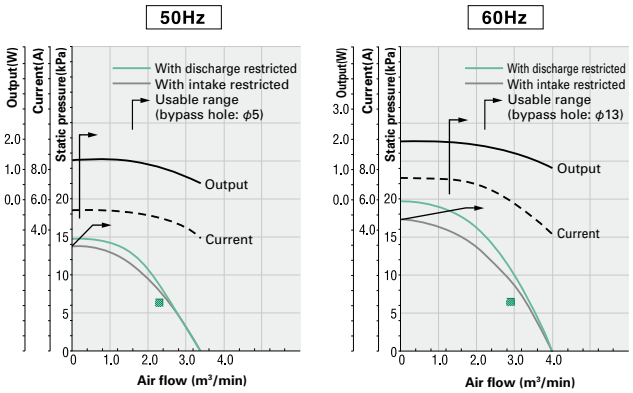

※Caution: Always remove the emblem on the main unit before fully enclosed intake operation.

VFZ601A **VFZ601A-4Z**

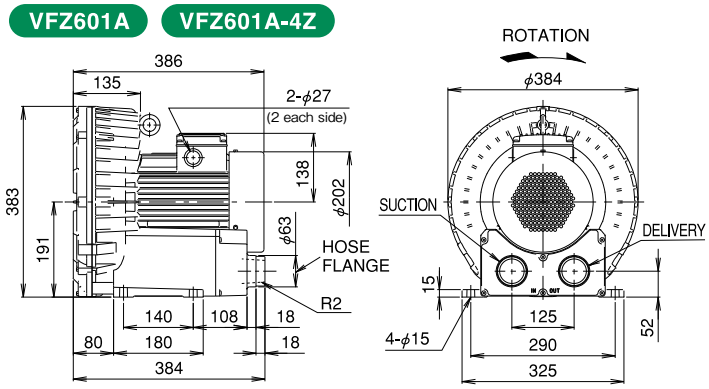

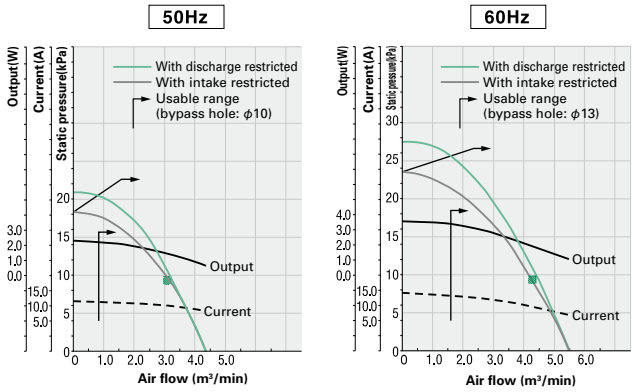

※Caution: Always remove the emblem on the main unit before fully enclosed intake operation.

Note 1: The above values are obtained in a thermally saturated state. Depending on the model, characteristics near cut-off (static pressure, current, output) are therefore 0 – 20% higher at ambient temperature due to air density.
Note 2: ▨ noted with characteristics above are values on the name plate (flow and static pressure only). Current and output values indicated are limits for continuous use.
Note 3: Check 'Standard Specifications' for current values for non-standard voltage products (-4Z).

Internal structure

10～30 type

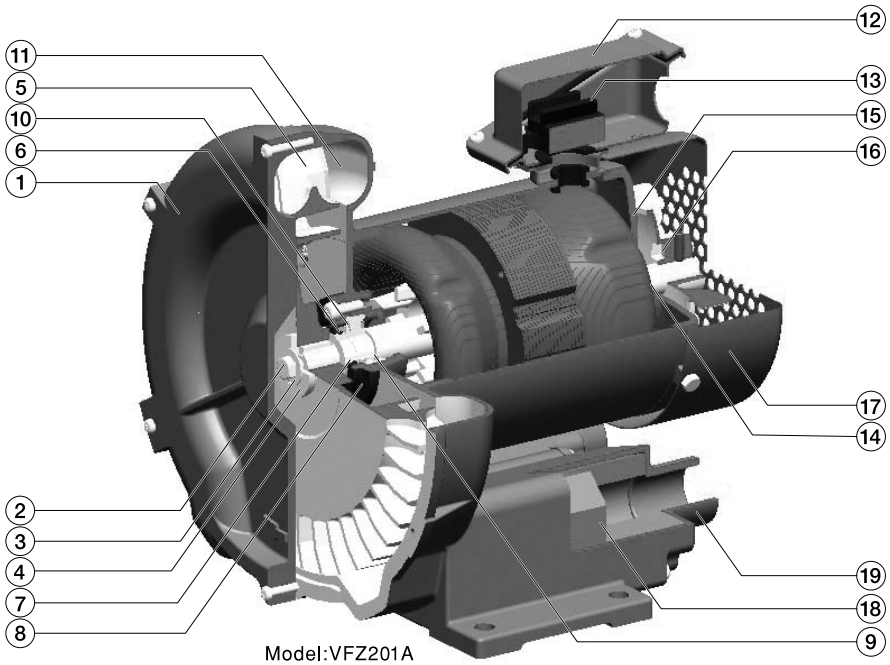

Model:VFZ201A

No	Parts	Material
1	Casing	ADC12 or FC150
2	Locking bolt	Steel
3	Claw washer	SPCC
4	Clamp plate	SPCC
5	Fan	ADC12
6	Adjuster	BsP3-1/2
7	Collar	Brass
8	End cover	FC150
9	Deep groove ball bearing	
10	Oil seal	Nitrile rubber
11	Casing	ADC12
12	Terminal box	SPCC
13	Terminal block	Phenolic resin
14	Deep groove ball bearing	
15	Reverse operation shield	FC150
16	External fan	Plastic
17	Fan cover	SPCC
18	Sound insulation	Flexible urethane
19	Flange	ADC12

Exploded diagram

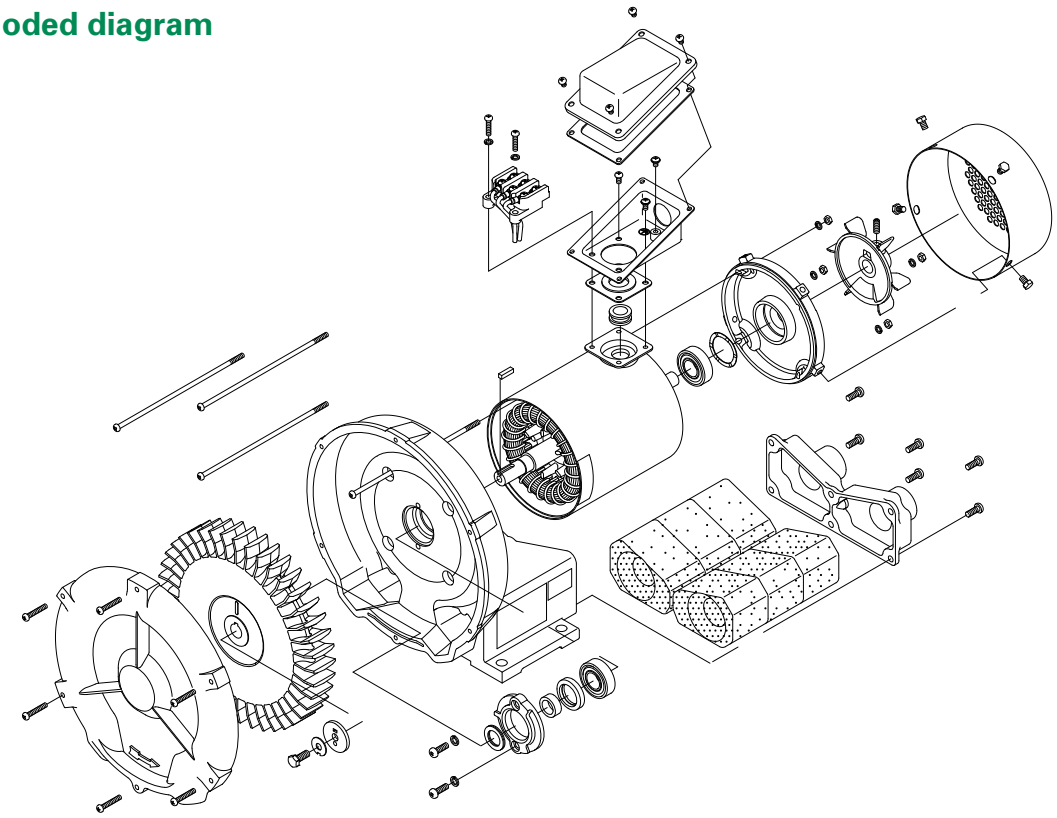

Internal structure

40～60 type

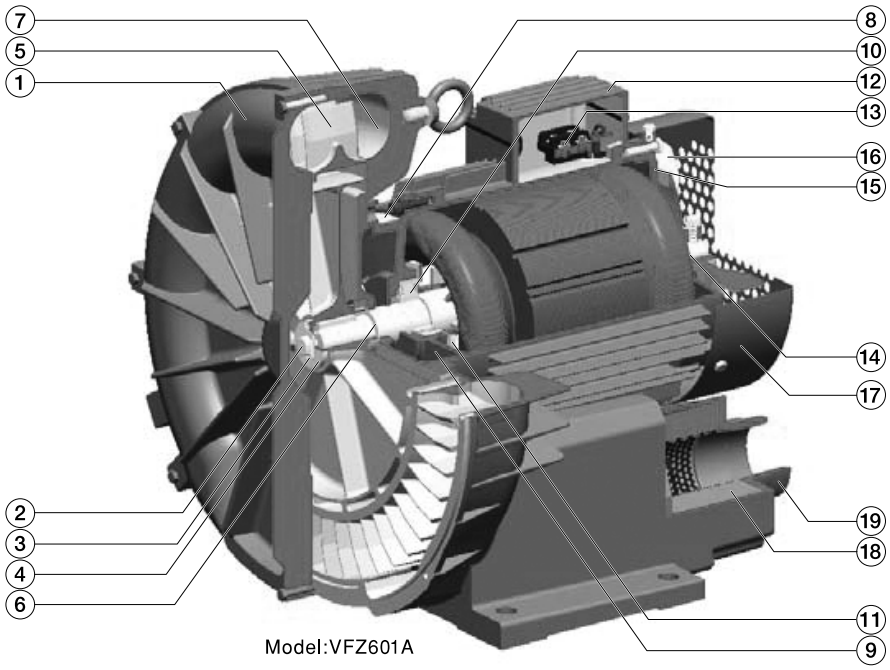

Model:VFZ601A

No	Parts	Material
1	Casing	ADC12 or FC150
2	Locking bolt	Steel
3	Claw washer	SPCC
4	Clamp plate	SPCC
5	Fan	ADC12
6	Adjuster	BsP3-1/2
7	Casing	ADC12
8	Emblem	APCC
9	Intermediate shield	FC150
10	Deep groove ball bearing	
11	Inner end cover	SPHC
12	Terminal box	ADC12
13	Terminal block	Phenolic resin
14	Deep groove ball bearing	
15	Reverse operation shield	FC150
16	External fan	Plastic or ADC12
17	Fan cover	SPCC
18	Sound insulation	Flexible urethane or melamine foam
19	Flange	ADC12

Exploded diagram

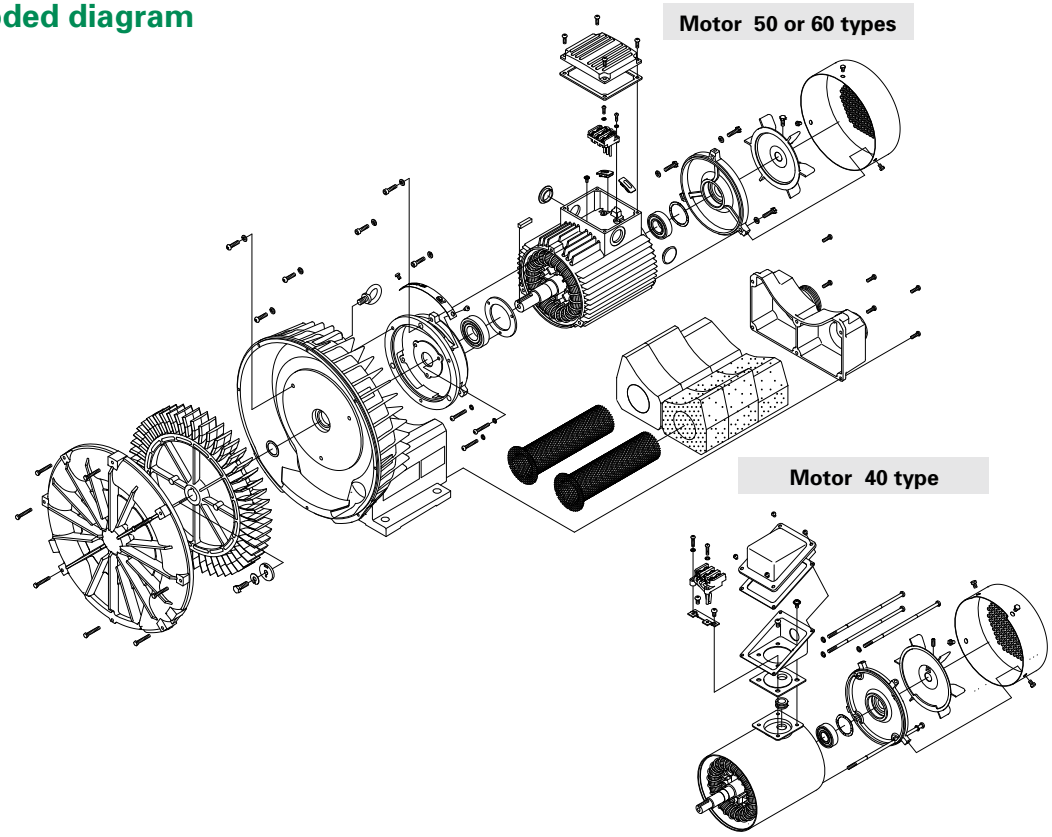

Features

- **Complies with EU RoHS directive and CE marking standard**
- **For fully enclosed intake operation (50 and 60 types)**

  Caution
  Always remove the emblem on the main unit before installation with fully enclosed intake applications.
  Operation without removing the emblem may result in deterioration of the motor insulation.

- **Design eliminates oil seals in the blower (40 – 60 types)**
- **International Class IP54 protection (for motor)**

Model:VFZ501A

Paint color

Munsell 2.5Y5/1

Piping

For companion flange

Model description

V F Z ○○1 □

- Specifications AF: 3-phase standard type (for companion flange piping)
- Model
- Capacity (10～60)

Dimensional outline drawing and characteristic

VFZ101AF

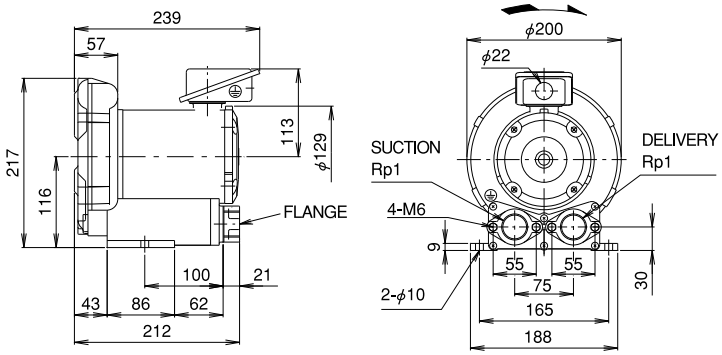

50Hz

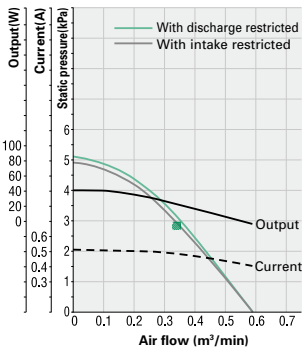

60Hz

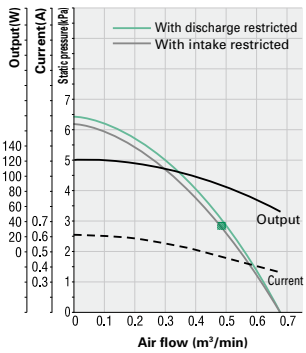

Note 1: The above values are obtained in a thermally saturated state. Depending on the model, characteristics near cut-off (static pressure, current, output) are therefore 0 – 20% higher at ambient temperature due to air density.
Note 2: ▨ noted with characteristics above are values on the name plate (flow and static pressure only). Current and output values indicated are limits for continuous use.

Dimensional outline drawing and characteristic

VFZ201AF

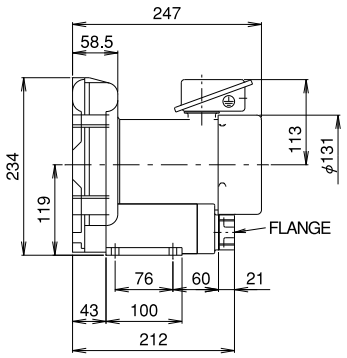

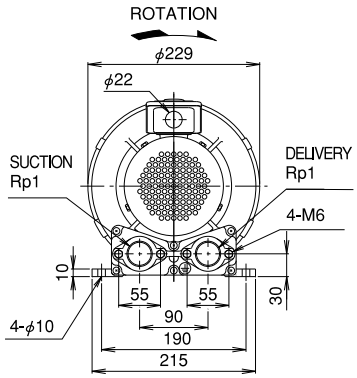

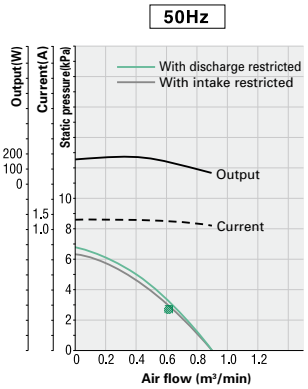

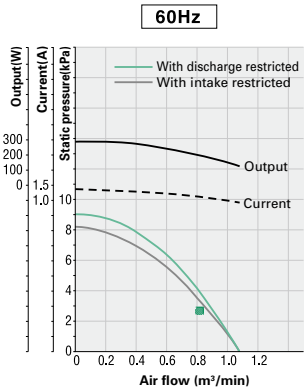

VFZ301AF

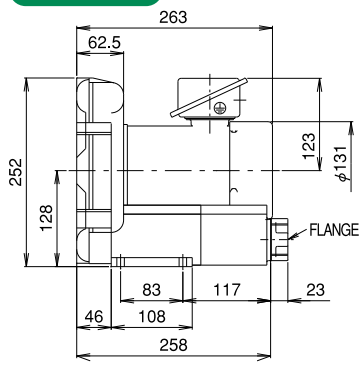

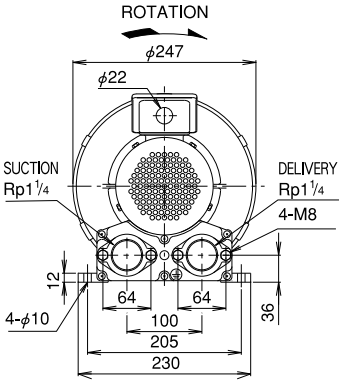

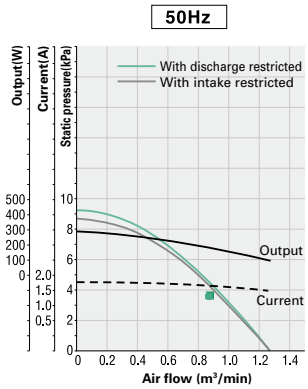

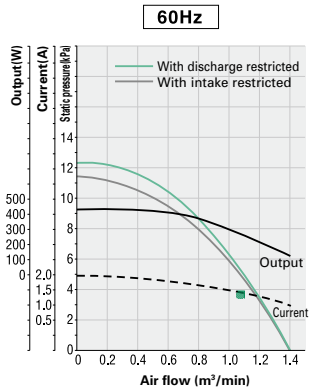

VFZ401AF

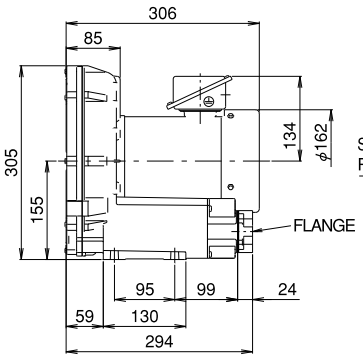

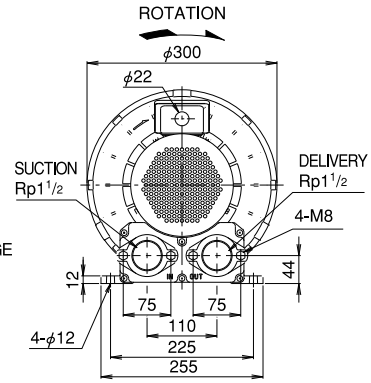

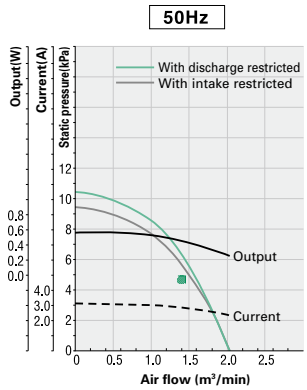

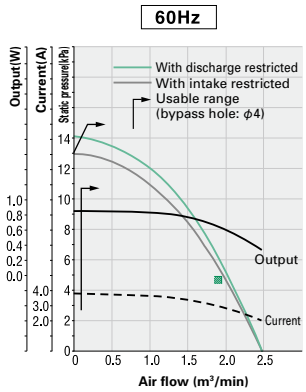

VFZ501AF

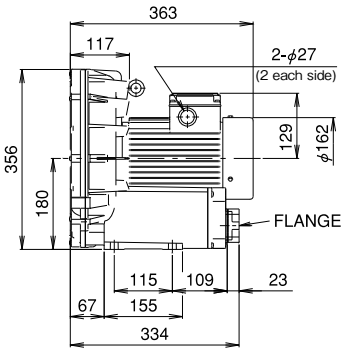

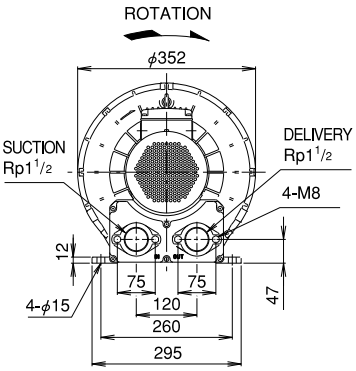

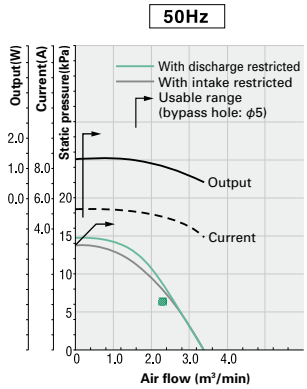

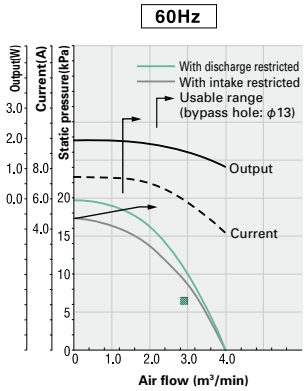

※Caution: Always remove the emblem on the main unit before fully enclosed intake operation.

Note 1: The above values are obtained in a thermally saturated state. Depending on the model, characteristics near cut-off (static pressure, current, output) are therefore 0 – 20% higher at ambient temperature due to air density.

Note 2: ▨ noted with characteristics above are values on the name plate (flow and static pressure only). Current and output values indicated are limits for continuous use.

■Dimensional outline drawing and characteristic

VFZ601AF

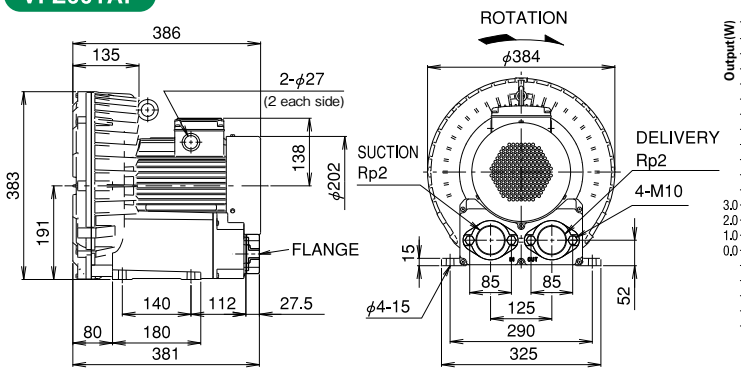

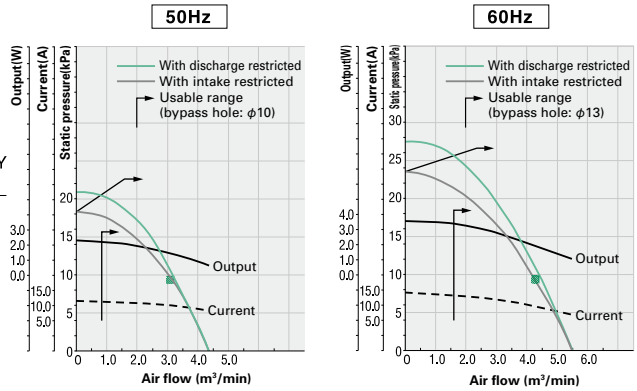

※Caution: Always remove the emblem on the main unit before fully enclosed intake operation.

Note 1: The above values are obtained in a thermally saturated state. Depending on the model, characteristics near cut-off (static pressure, current, output) are therefore 0 – 20% higher at ambient temperature due to air density.

Note 2: ▨ noted with characteristics above are values on the name plate (flow and static pressure only). Current and output values indicated are limits for continuous use.

Ring blower
3-phase large capacity standard type, non-standard voltage product

VFZ-A model (70～90type)

Light & Small × High performance

■Features

- ●Dramatic reduction in size and weight
- ●Fully enclosed intake operation
- ●Reduction in harsh high frequency sounds
  (max ▲ max 10 dB (A) compared to previous products)
- ●Complies with EU RoHS directive and CE marking standard
- ●International Class IP54 protection (for motor)
- ●Piping companion flange system used

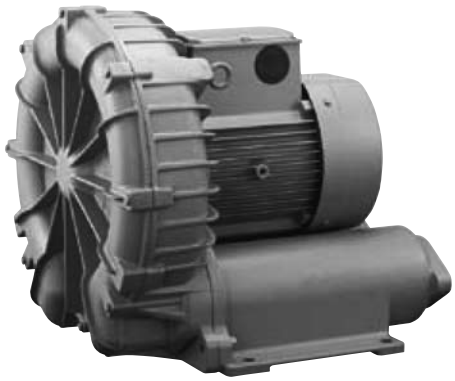

■Paint color

Munsell 2.5Y5/1

■Model description

Model:VFZ501A

V F Z ○○1 □

- Specifications: A: 3-phase standard type; A-4Z: 3-phase, non-standard voltage product
- Model
- Capacity (70・80・90)

■Comparison with previous products

Blower height

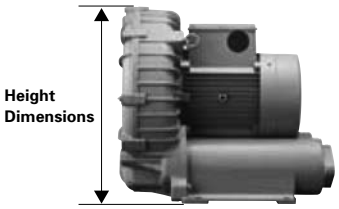

Type	VFZ	VFC (previous product)
70	447mm	463mm
80	501mm	522mm
90	535mm	588mm

Mass comparison

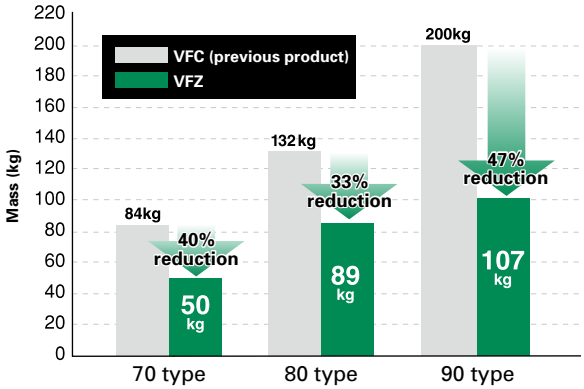

Noise comparison (high frequency)

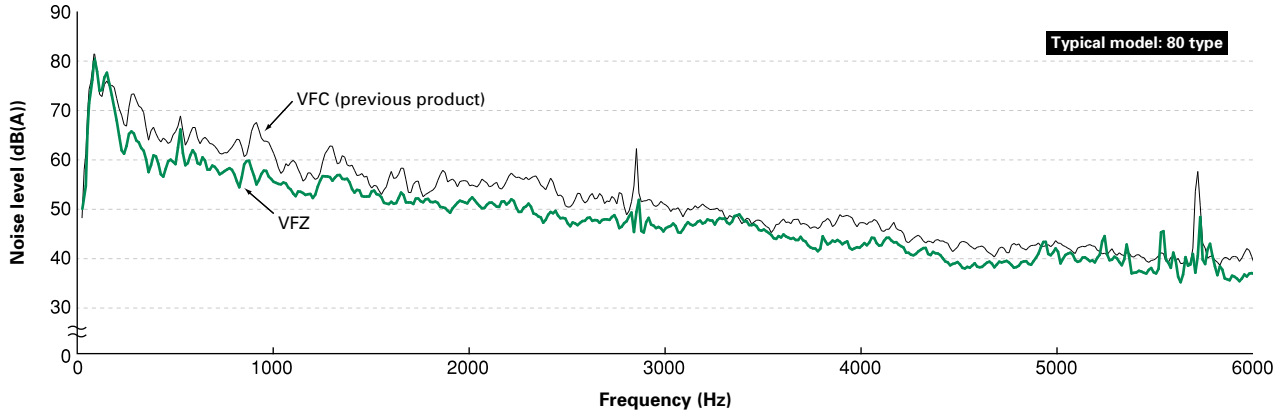

※Above noise comparison (high frequency) data obtained from typical model at 60 Hz and 200V in unrestricted operation.
※Values measured at distance of 1.0 m.

Dimensional outline drawing and characteristic

VFZ701A **VFZ701A-4Z**

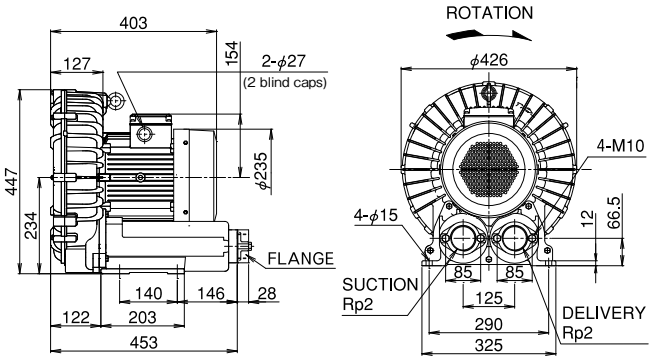

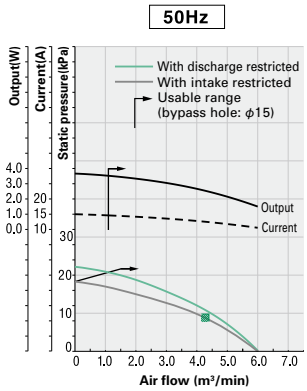

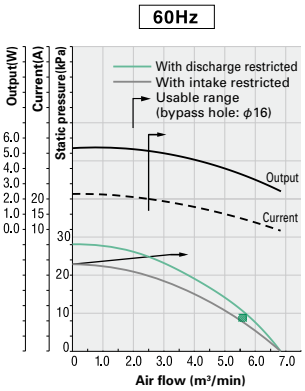

VFZ801A **VFZ801A-4Z**

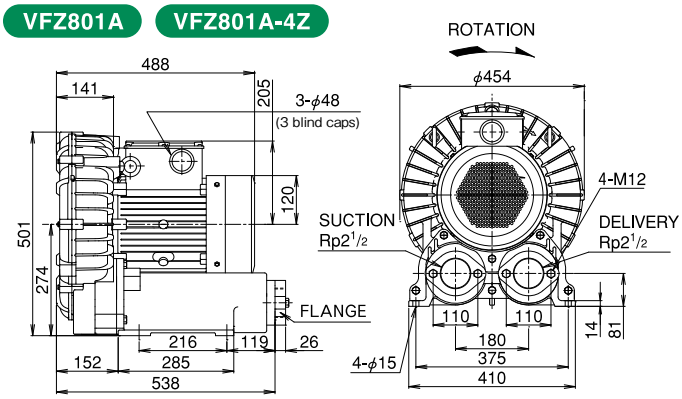

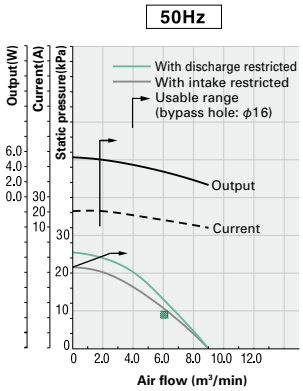

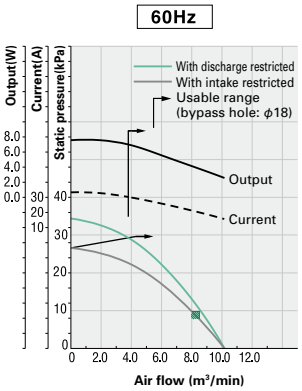

VFZ901A

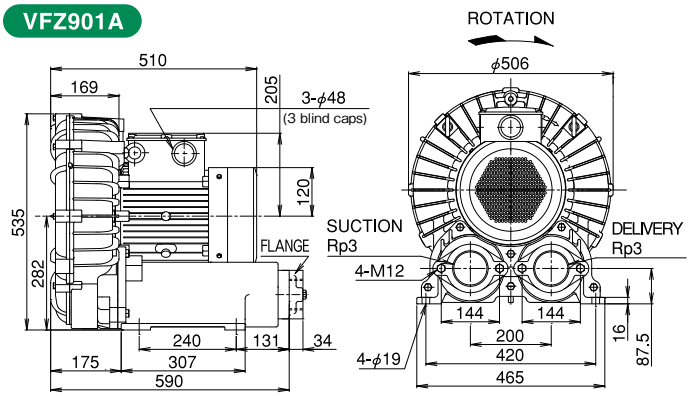

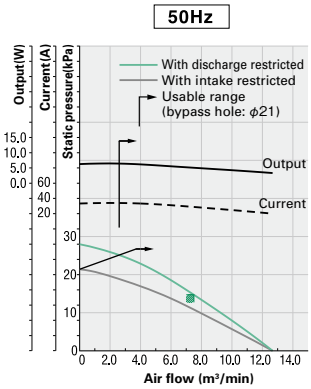

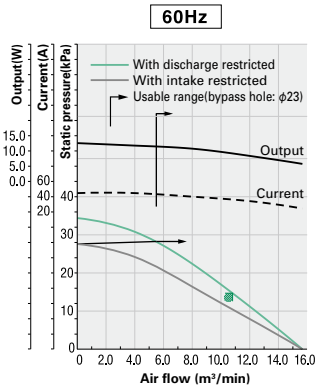

Note 1: The above values are obtained in a thermally saturated state. Depending on the model, characteristics near cut-off (static pressure, current, output) are therefore 0 – 20% higher at ambient temperature due to air density.
Note 2: ▨ noted with characteristics above are values on the name plate (flow and static pressure only). Current and output values indicated are limits for continuous use.
Note 3: Check 'Standard Specifications' for current values for non-standard voltage products (-4Z).

Internal structure

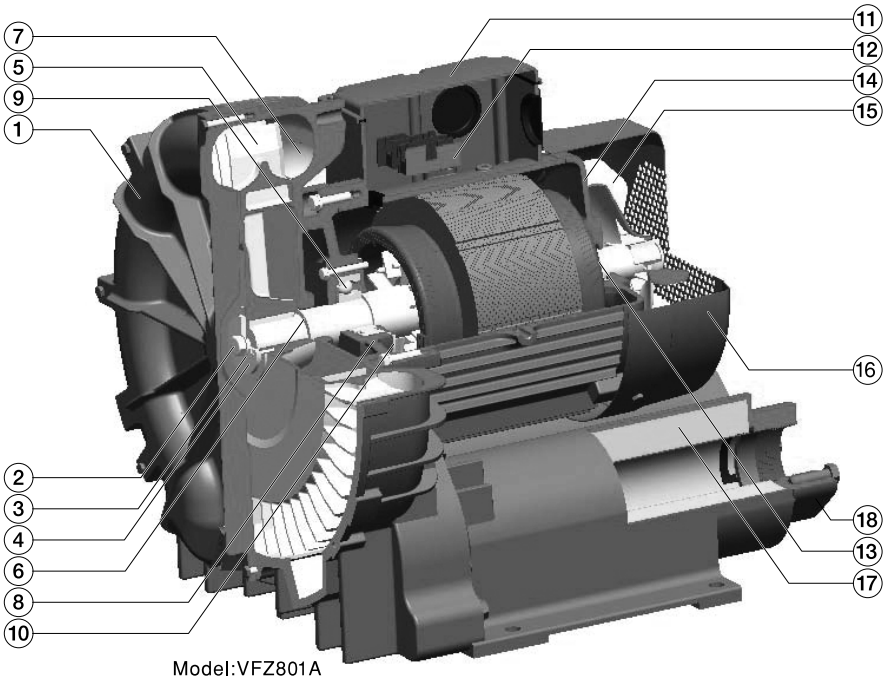

Model:VFZ801A

No	Parts	Material
1	Casing	FC150
2	Locking bolt	Steel
3	Claw washer	SPCC
4	Clamp plate	SPCC
5	Fan	ADC12
6	Adjuster	BsP3-1/2
7	Casing	ADC12
8	Intermediate shield	FC150
9	Deep groove ball bearing	
10	Inner end cover	SPHC
11	Terminal box	ADC12
12	Terminal block	Phenolic resin
13	Deep groove ball bearing	
14	Reverse operation shield	FC150
15	External fan	Plastic or ADC12
16	Fan cover	SPCC
17	Sound insulation	Glass wool
18	Flange	FC150

Exploded diagram

Motor 70 type

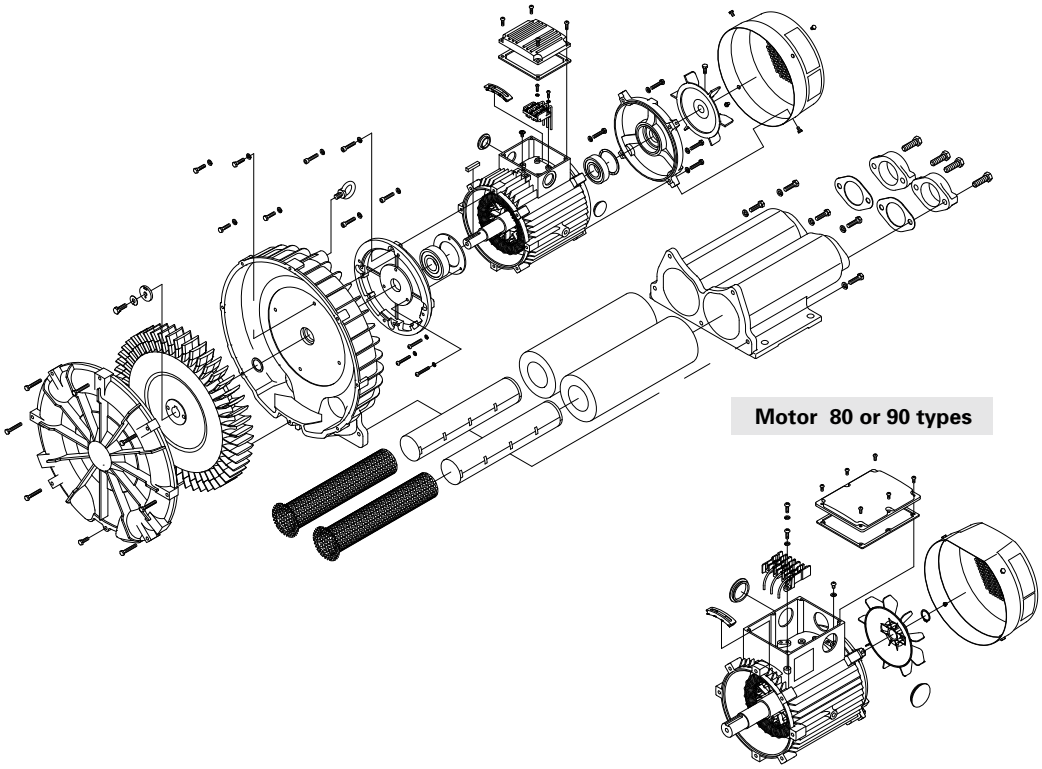

Features

- **Large reduction in harsh high frequency sounds (▲max max 15 dB (A) compared to previous products)**
- **Complies with EU RoHS directive and CE marking standard**
- **For fully enclosed intake operation (50 and 60 types)**

  Caution
  Always remove the emblem before installation with fully enclosed intake applications.
  Operation without removing the emblem may result in deterioration of the motor insulation.
- **Design eliminates oil seals in the blower (40 – 60 types)**
- **Employs an aerofoil section external fan to reduce fan noise (60 – 90 types)** Patent granted (2008-115790)
- **Dramatic reduction in size and weight (70 - 90 types)**
- **International Class IP54 protection (for motor)**

Model:VFZ501AN

Paint color

Munsell 10YR4/1

Model description

V F Z ○○ 1 A N

- Specifications (3-phase low-noise type)
- Model
- Capacity (10～90)

Comparison with previous products

Blower height (70 type and above)

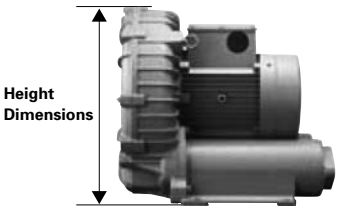

Type	VFZ	VFC (previous product)
70	447mm	463mm
80	501mm	522mm
90	535mm	588mm

Mass comparison (70 type and above)

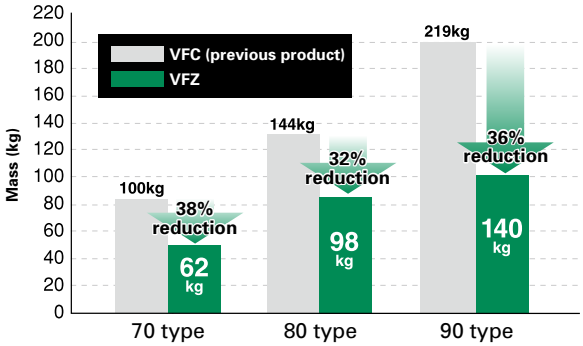

Noise comparison (high frequency)

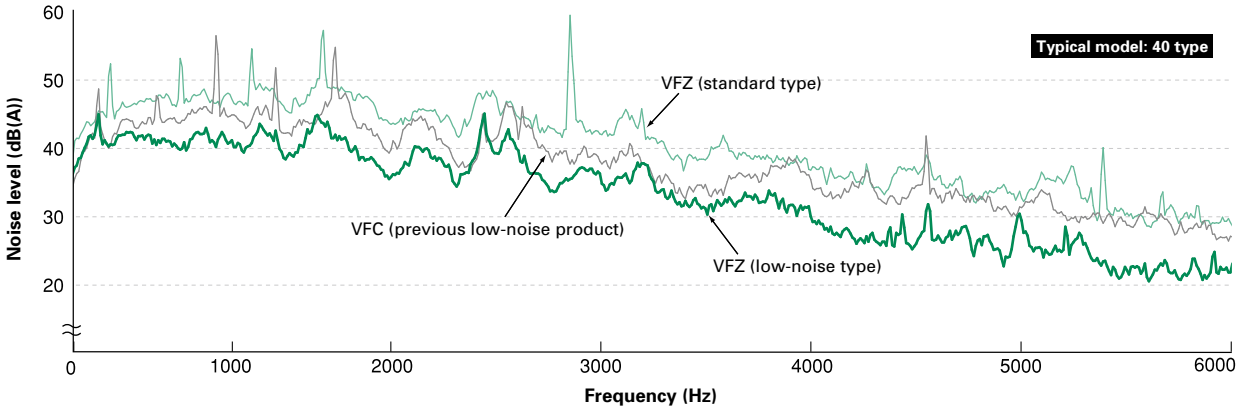

※Above noise comparison (high frequency) data obtained from typical model at 60 Hz and 200V in unrestricted operation.
※Values measured at distance of 1.0 m.

Dimensional outline drawing and characteristic

VFZ101AN

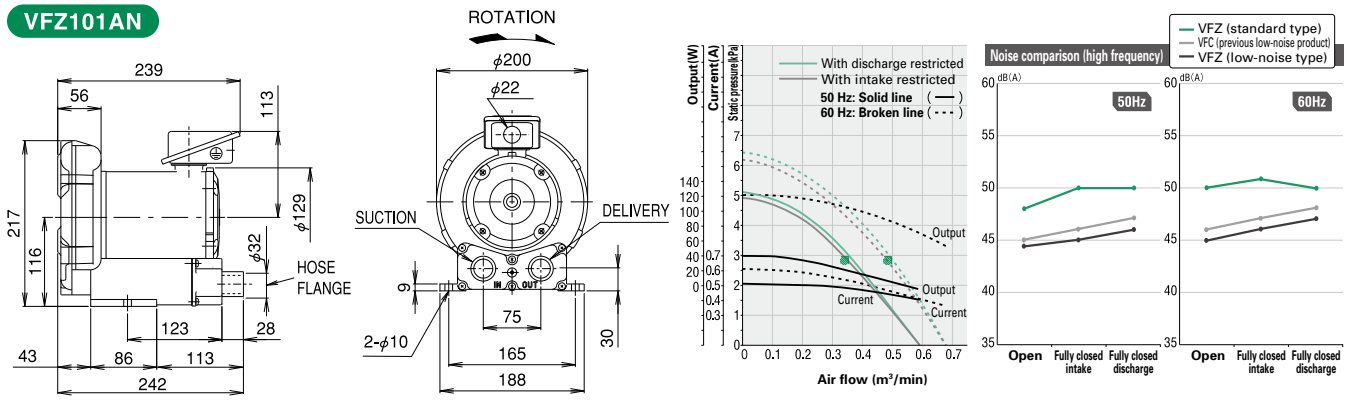

VFZ201AN

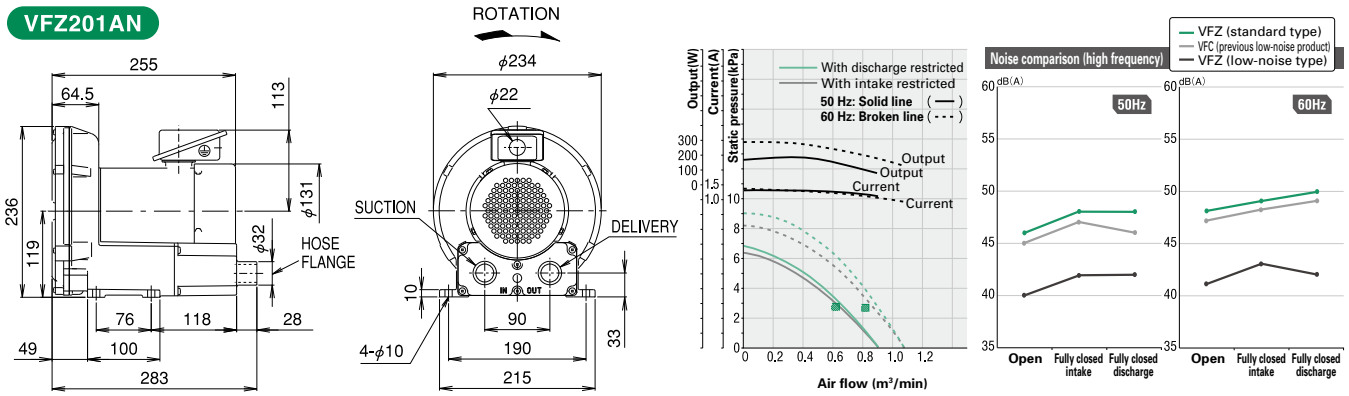

VFZ301AN

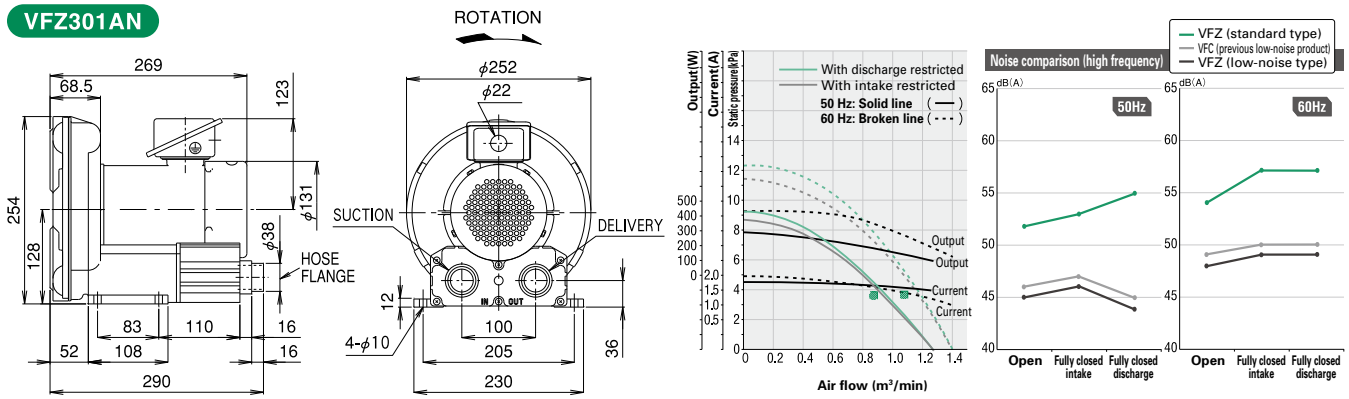

VFZ401AN

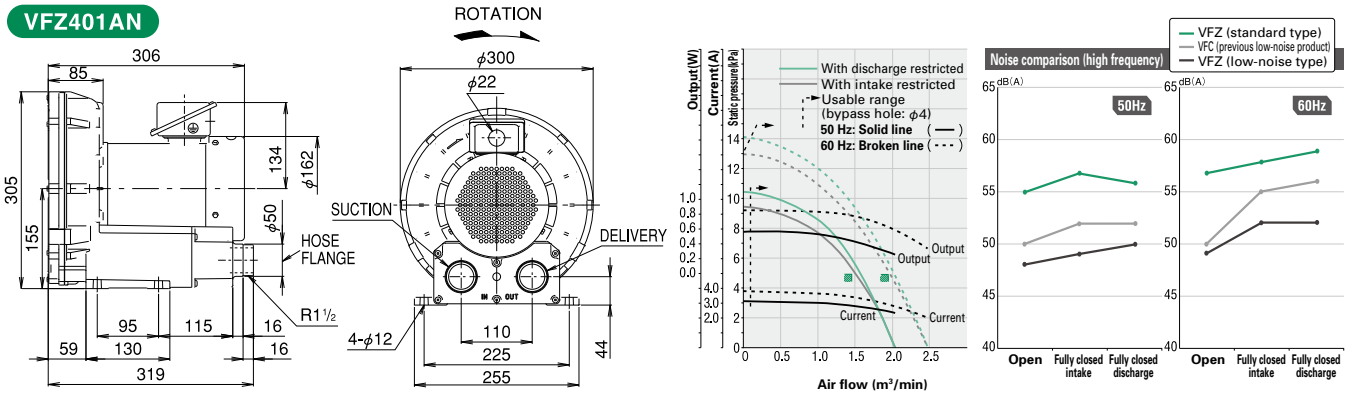

Note 1: The above values are obtained in a thermally saturated state. Depending on the model, characteristics near cut-off (static pressure, current, output) are therefore 0 – 20% higher at ambient temperature due to air density.
Note 2: ▨ noted with characteristics above are values on the name plate (flow and static pressure only). Current and output values indicated are limits for continuous use.
Note 3: Measurements for the above noise comparison (high frequency) graph were taken at a distance of 1.0 m.

Dimensional outline drawing and characteristic

VFZ501AN

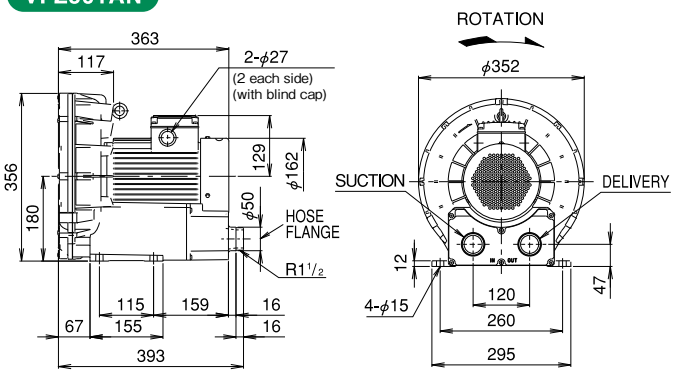

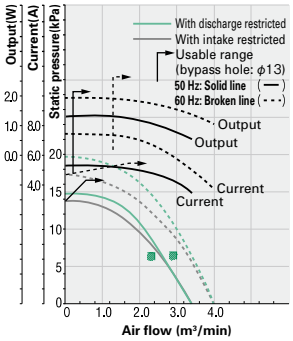

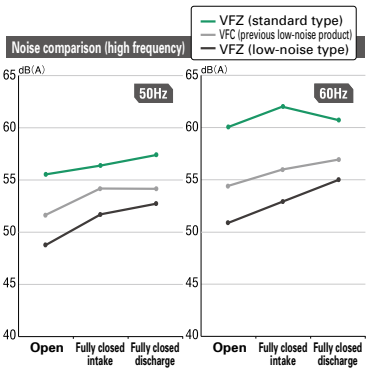

※Caution: Always remove the emblem on the main unit before fully closed intake operation.

VFZ601AN

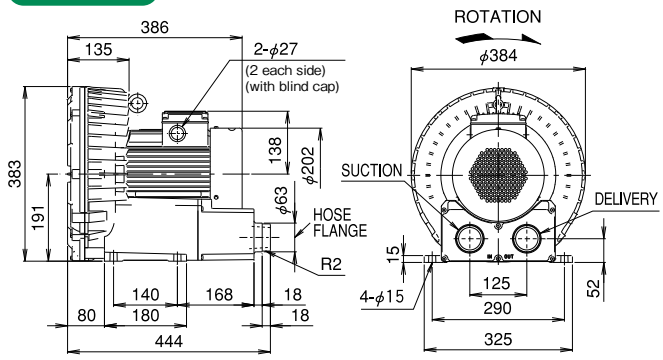

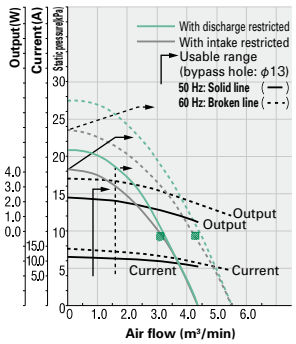

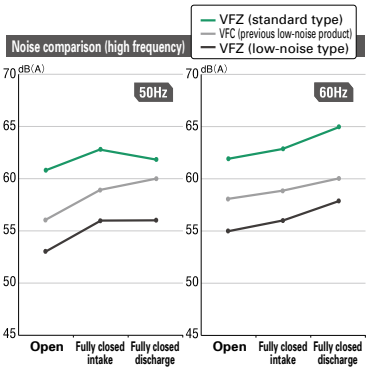

※Caution: Always remove the emblem on the main unit before fully closed intake operation.

VFZ701AN

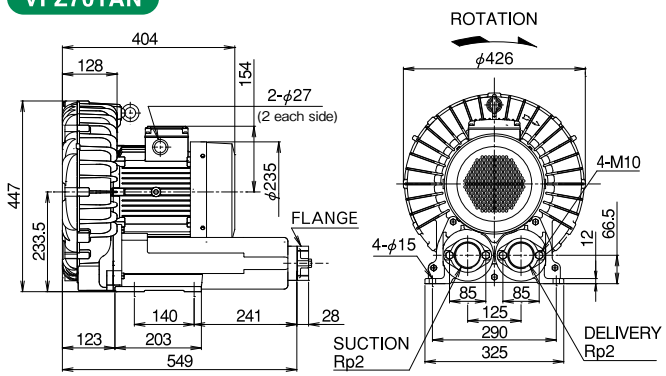

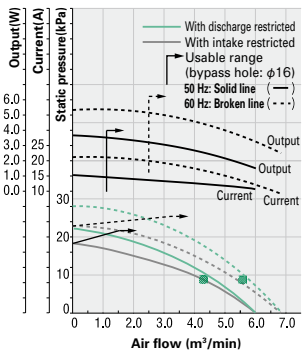

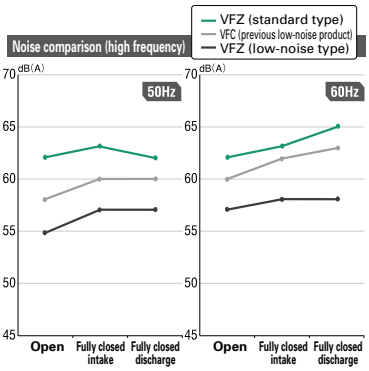

VFZ801AN

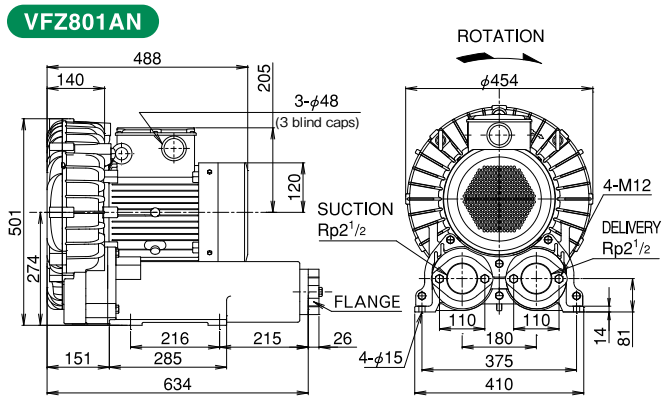

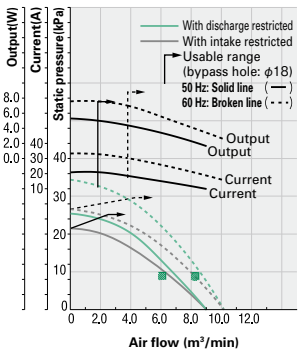

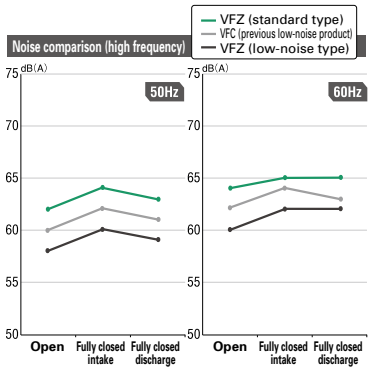

Note 1: The above values are obtained in a thermally saturated state. Depending on the model, characteristics near cut-off (static pressure, current, output) are therefore 0 – 20% higher at ambient temperature due to air density.
Note 2: ▨ noted with characteristics above are values on the name plate (flow and static pressure only). Current and output values indicated are limits for continuous use.
Note 3: Measurements for the above noise comparison (high frequency) graph were taken at a distance of 1.0 m.

Dimensional outline drawing and characteristic

VFZ901AN

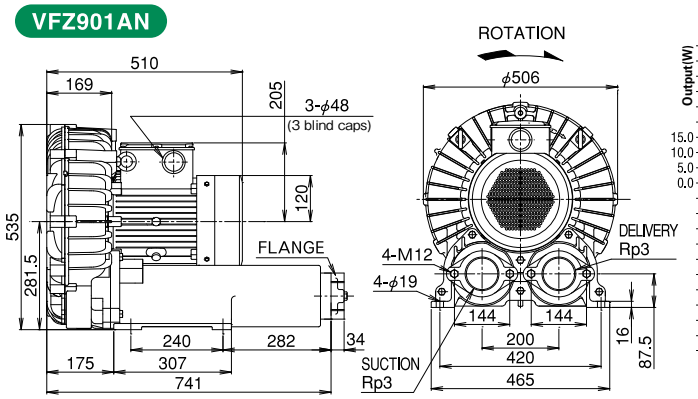

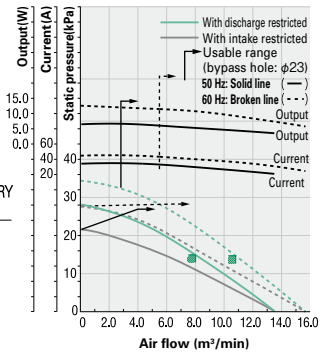

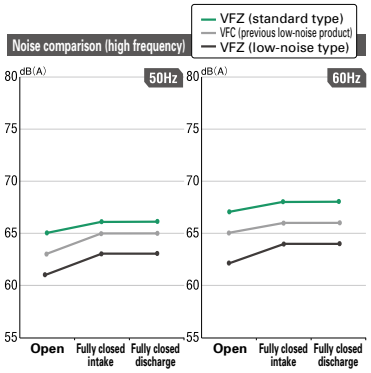

Note 1: The above values are obtained in a thermally saturated state. Depending on the model, characteristics near cut-off (static pressure, current, output) are therefore 0 – 20% higher at ambient temperature due to air density.
Note 2: ▨ noted with characteristics above are values on the name plate (flow and static pressure only). Current and output values indicated are limits for continuous use.
Note 3: Measurements for the above noise comparison (high frequency) graph were taken at a distance of 1.0 m.

Auxiliary pipe silencer

The ring blower itself incorporates a very effective silencer, however, depending on the conditions of use (e.g. long pipes) it may be necessary to further reduce noise at the ends of the piping. In such cases, insert this auxiliary pipe silencer midway along the pipe, or at the end.

External dimensions

Fig.1

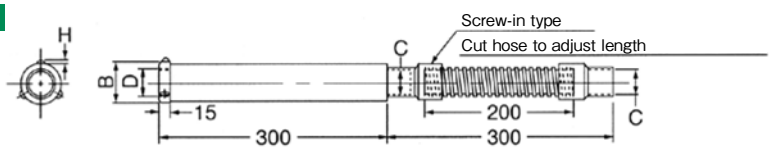

(units:mm)

Silencer					Flexible hose			Suitable ring blower
Model	B	C	D	Figure	Total length	Hose length	Figure	
VFY021B	52	32	Rp1	Fig.1	300	200	Fig.1	10 or 20 types
VFY023B	64	38	Rp1 1/4	Fig.1	300	200	Fig.1	30 type

Fig.2

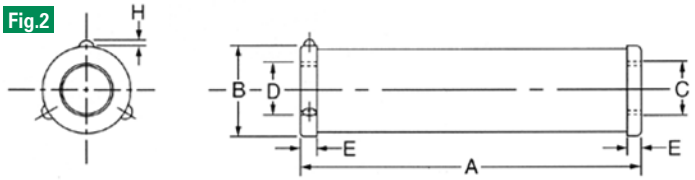

(units:mm)

Silencer							Suitable ring blower
Model	A	B	C	D	E	Figure	
VFY024B	300	79	Rp1 1/2	Rp1 1/2	15	Fig.2	40 or 50 types
VFY026B	400	104	Rp2	Rp2	17	Fig.2	60 type

Fig.3

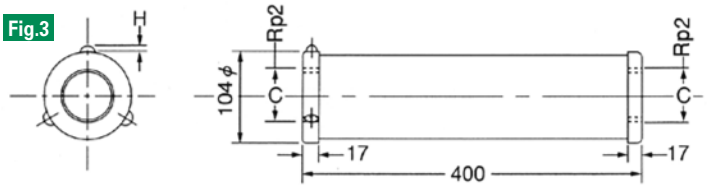

Fig.4

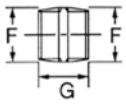

(units:mm)

Silencer			Nipple			Suitable ring blower
Model	C	Figure	F	G	Figure	
VFY027A	Rp2	Fig.3	R2	58	Fig.4	70 type

Fig.5

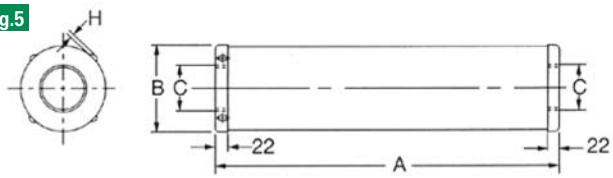

Fig.6

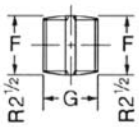

Fig.7

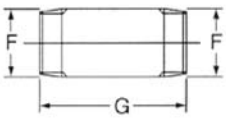

(units:mm)

Silencer					Nipple			Suitable ring blower
Model	A	B	C	Figure	F	G	Figure	
VFY028A	520	144	Rp2 1/2	Fig.5	R2 1/2	70	Fig.6	80 type
VFY029A	670	169	Rp3	Fig.5	R3	190	Fig.7	90 type

Note 1: The above bolt head height (H) is approximately 3 mm.
Note 2: Always tighten to a torque of no more than 29.4 N.m.
Note 3: The bore of the 3-phase standard type (for companion flange), UL/CSA approved, high flow volume/high-pressure type differs from that of the auxiliary pipe silencer. Use a commercially available joint.
Note 4: These optional parts are handled by Fuji Electric Technica Co., Ltd.

Air filter

When collecting waste with the ring blower, fit an air filter in the intake pipe to protect the unit from dust etc.

- **Very low electrical resistance**
- **Excellent air-tightness**
- **Simple maintenance, and elements easily replaced**

Specifications

Air filter					Suitable ring blower	
Model	Area of filter material	Pipe bore (nominal thread)	Mass	Built-in element	Type	Intake bore
VFY031A	0.16m²	Rp1 1/4 (Parallel set screw)	1.0kg	VFY031A-E	08 type	※Always check bore size against 'Standard Specifications for Intake and Discharge Bores'.
					10 type	
VFY032A	0.42m²	Rp1 1/4 (Parallel set screw)	1.8kg	VFY032A-E	20 type	
					30 type	
VFY034A	0.42m²	Rp1 1/2 (Parallel set screw)	1.8kg	VFY032A-E	40 type	
					50 type	
VFY036A	1.28m²	Rp2 (Parallel set screw)	4.6kg	VFY036A-E	60 type	
					70 type	
VFY038A (T style)	2.12m²	Rp3 (Parallel set screw)	11.5kg	VFY038A-E	80 type	
					90 type	
VFY039A	2.79m²	Rp3 (Parallel set screw)	12.5kg	VFY039A-E	80 type	
					90 type	

Caution: The above pipe bores (nominal thread) are in accordance with Tapered Pipe Threads JIS B 0203. Older terminology refers to 'PS□.

Initial air-flow resistance

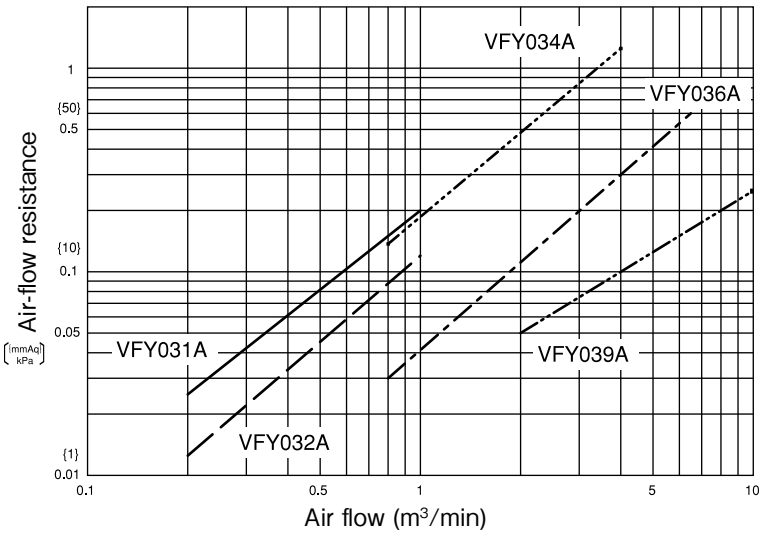

●Cautions for mounting air filters

The bore of the air filter outlet and the ring blower intake differ. Use a commercially available joint.

●Cautions for maintenance and checking of air filters

(1) Clogging of air filters differs with conditions of use. Check periodically.
(2) When cleaning and replacing the element, remove it to ensure that dust and particles do not fall into the ring blower. Remove dust and particles which have collected inside.
(3) If the element contains water, air-flow resistance will increase, with a consequent drop in efficiency, and its strength will deteriorate. Take care to ensure that moisture and water droplets do not enter the element.
(4) The element is a consumable, and spares should be kept available if conditions of use are bad.

External dimensions

VFY031A

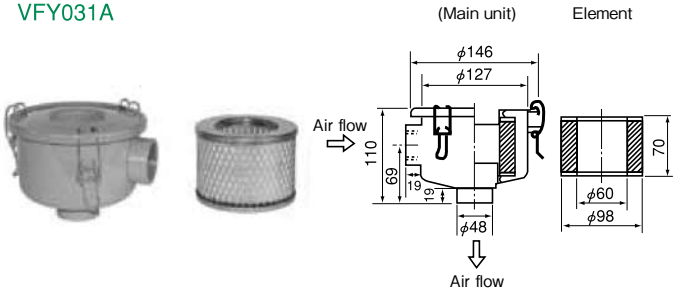

VFY032A

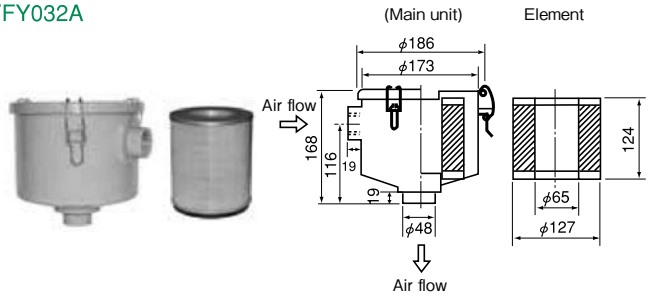

VFY034A

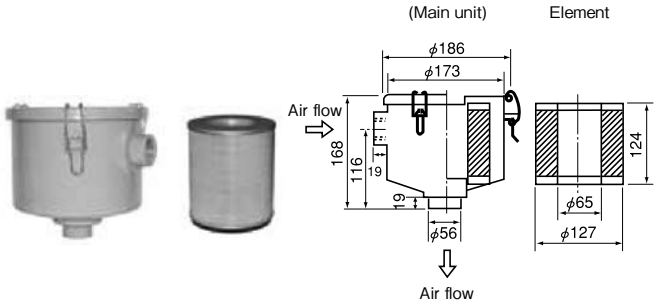

VFY036A

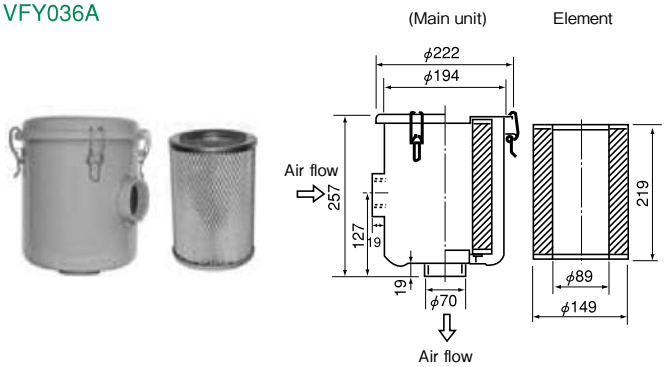

VFY038A

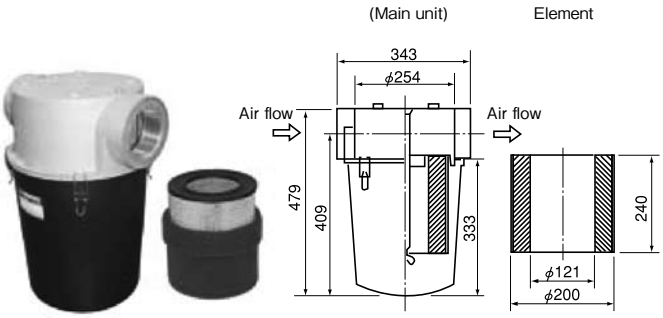

VFY039A

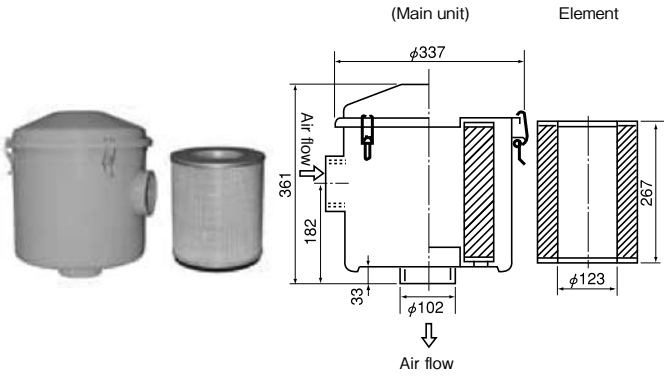

Mounting diagram

08 - 30 types

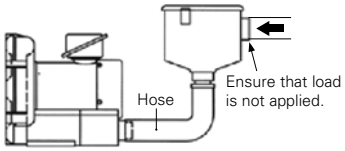

40 - 60 types

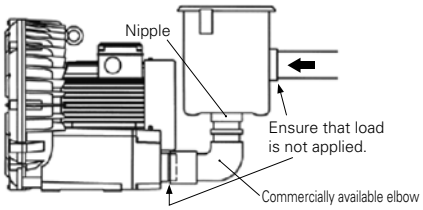

70 - 90 types

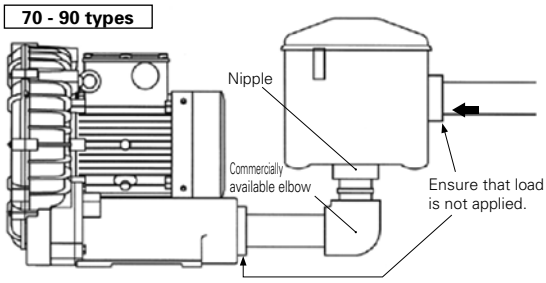

Caution: These special accessories are handled by Fuji Electric Technica Co., Ltd.

Sound-proof box

The structure of the sound-proof box is as shown in Fig.1. It consists of the main unit within which the sound insulation is attached, and two cooling air opening silencers.

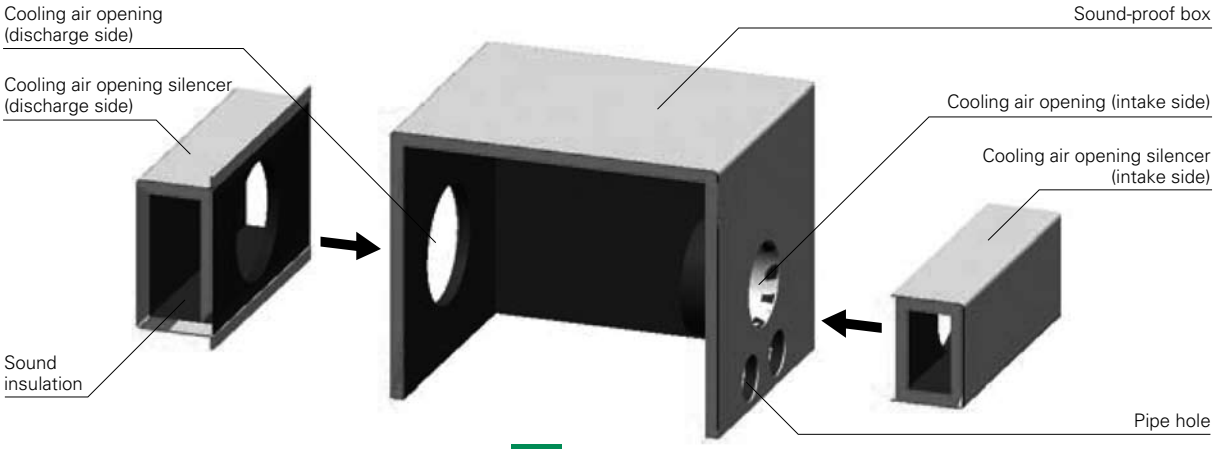

Fig.1 Structure

Caution: Cooling air opening silencer screwed or welded to main unit.

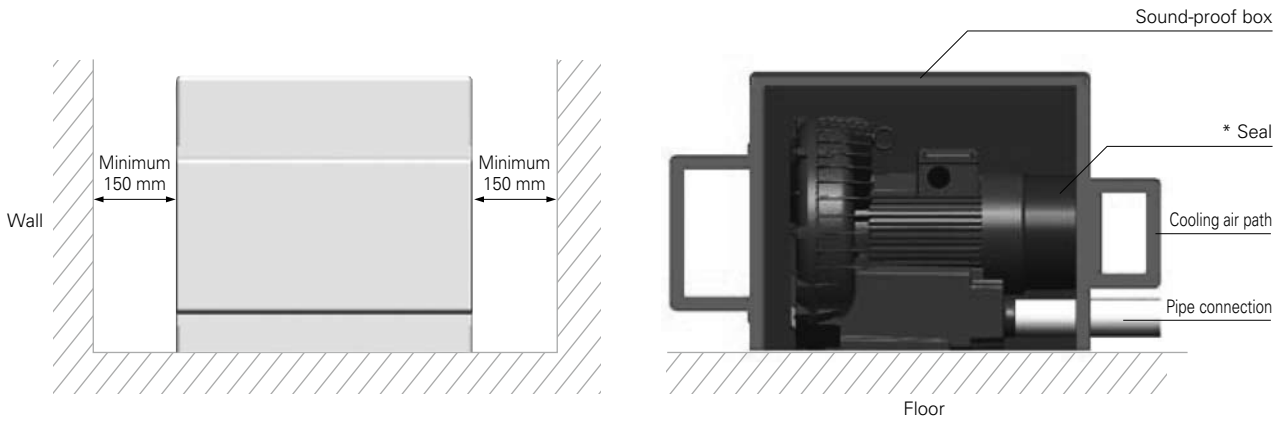

Fig.2 Installation

Installation sequence for sound-proof box

1. Install ring blower
2. Place sound-proof box over ring blower
3. Pass pipe connection through pipe hole and fix in place.
4. Fix sound-proof box supports in place.

Cautions for Use

(1) Ensure that the motor fan cover is properly sealed onto the cooling air opening location at * in Fig.2.
(2) Always fit pipe connections to the ring blower intake and outlet to connect through the sound-proof box.
(3) Ensure that there are no obstructions to cooling air (e.g. walls) within 150mm of the cooling air opening (intake, exhaust) silencer. See Fig.2.
(4) Ensure that the location at * in Fig.2 does not come off, allowing the sound-proof box to move.
(5) Fit a pipe silencer as well if necessary.

External dimensions

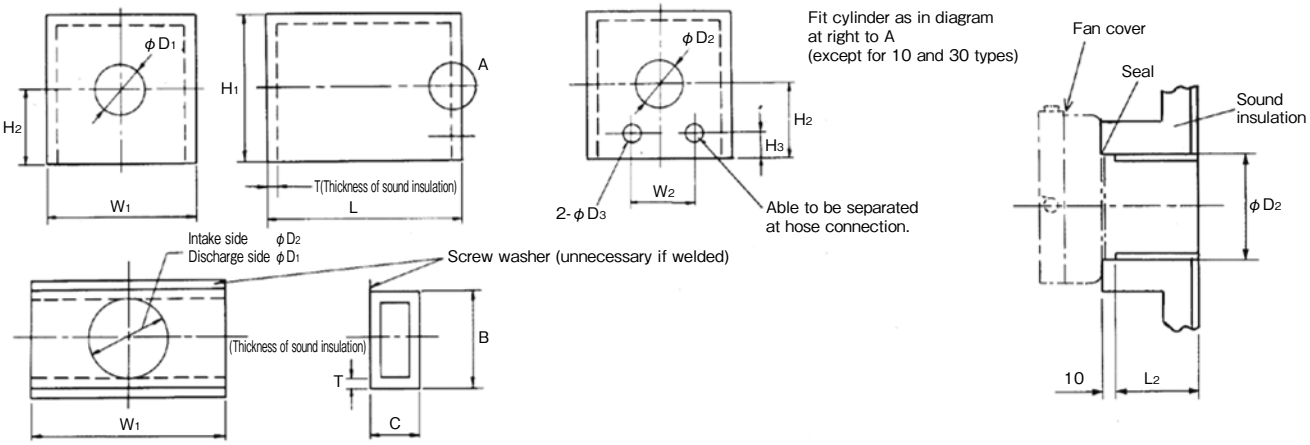

(units:mm)

Model	L	W1	W2	H1	H2	H3	T	D1	D2	D3	B Intake side Discharge side	C Intake side Discharge side	L2
VFZ101A、AN	295	261	75	249	116	30	20	110	68	40	111／153	82／87	—
VFZ201A、AN	367	289	90	266	119	30	20	130	104	40	138／173	82／92	45
VFZ301A、AN	340	307	100	304	128	36	20	130	104	46	138／193	82／97	—
VFZ401A、AN	430	357	110	354	155	44	20	150	130	63	153／193	87／102	37
VFZ501A、AN	520	437	120	419	180	47	20	200	142	63	173／243	112／122	90
VFZ601A、AN	550	477	125	450	191	52	20	200	142	76	173／243	112／127	97
VFZ701A、AN	662 (708)	519	125	504	234	66.5	20	210	175	64	208／253	112／142	163 (213)
VFZ801A、AN	760 (804)	539	180	576	274	81	20	245	204	80	235／288	117／152	161 (211)
VFZ901A、AN	772.5 (929)	597	200	619	282	87.5	20	280	240	93	268／323	132／167	164 (309)

Note 1: The sound-proof box is not supplied. Dimensions are provided for use in building the box if further sound-proofing is necessary.
Note 2: All dimensions internal.
Note 3: Install small ventilation fan at D1 in VFZ-10 type.
Note 4: Fill any gaps at D3 following wiring. Recheck D3 dimension with special piping.
Note 5: Dimensions in brackets for the above 70, 80, and 90 types are for the AN Series.

Material

(1) Main unit and cool air silencer box

Use 1 – 2 mm thick steel sheet.
Special sound-proofing material need not be used.

(2) Sound insulation

Sound insulation in the table at right is also available.

[Sound insulation]

Sound insulation		Manufacturer	Remarks
Glass wool		Asahi Fiber Glass Co., Ltd., Paramount Glass MFG. Co., Ltd. etc.	Slightly higher price Good sound absorption
Liftflex		Nichias Corporation	
Moltprene (Colorform)	SC	Inoac Corporation	Recommended items products
	ESC		Slightly reduced sound absorption properties, with lower price.

Cautions for trial manufacture

(1) If welding the cooling air opening silencer into the main unit, attach the sound insulation after welding to prevent damage to it.
(2) Minimize all holes and gaps outside the cooling air path (e.g. cooling air opening).
(3) Ensure that sound insulation is at least 20 mm thick. Thin sound insulation reduces effectiveness.
(4) Ensure that the inside dimensions of the box are sufficient. If the dimensions are too small, the cooling effect, and sound-absorption, will be reduced. When fitting thick sound insulation, the internal dimensions of the box must be increased accordingly.
(5) The D3 dimension above assumes an SGP pipe connection. Ensure that dimensions are adjusted accordingly if other piping is used.
(6) Shape and position of wiring holes are determined by the user.

01 Technological material

Characteristic curves

(1) Characteristic curves in this catalog are in accordance with JIS B 8330 and Z8762, and show an air volume-static pressure characteristic at an intake air density of 101kPa (at 20℃). Variation in air volume at intake is ±10% from the resistance curve.

(2) Solid line characteristic curves indicate that continuous operation is possible. This range of use extends up to cut-off pressure for intake operation, and to near the cut-off pressure for discharge operation. When used in high-pressure discharge operation, care is required to ensure that the range of use is not exceeded. A bypass hole may be required in the pipe when used at the cut-off pressure.

02 Technological material

Bypass holes for discharge operation

Always ensure that a bypass hole is provided in the pipe for safety reasons, when using near the cut-off pressure in discharge operation. Refer to the table at right (VFZ Series) for bypass hole diameter.

(units:mm)

Model	50Hz	60Hz
VFZ081PN	—	—
VFZ101PN	ϕ3	ϕ4
VFZ201PN	ϕ5	ϕ4
VFZ301PN	ϕ7	ϕ8
VFZ401PN	—	ϕ4
VFZ081A (AN)	—	—
VFZ101A (AN)	ϕ3	ϕ5
VFZ201A (AN)	—	—
VFZ301A (AN)	—	—
VFZ401A (AN)	—	ϕ4
VFZ501A (AN)	ϕ5	ϕ13
VFZ601A (AN)	ϕ10	ϕ13
VFZ701A (AN)	ϕ15	ϕ16
VFZ801A (AN)	ϕ16	ϕ18
VFZ901A (AN)	ϕ21	ϕ23

Note: Check the relevant characteristic curves for models other than those above.

03 Technological material — Nameplates

To ensure a margin for safety, values on the nameplates are discharge characteristics.
Airflow volume and static pressure are the QN and PN optimum use characteristic points, and output and current are the LM and IR usable discharge characteristic points (see diagram below).

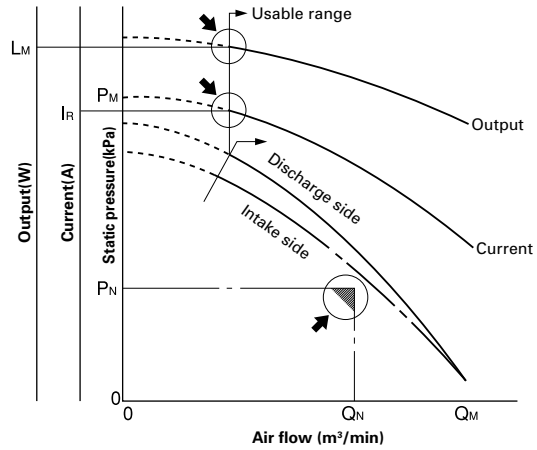

Airflow volume: Q_N, Static pressure: P_N — Optimum use characteristic point
Output: L_M, Current: I_R — Usable discharge point

Supplement

●Maximum values

Maximum discharge static pressure (PM) occurs at an airflow volume of 0.
Maximum air volume (QM) occurs at a static pressure of 0.

●Intake characteristics

Since air density with intake restricted is low, characteristic values are slightly lower relative to the case with discharge side restricted.

●Thermal settings

When using at both 50 Hz and 60 Hz, adjust to the 60Hz current value on the nameplate. If using solely at 50 Hz or 60 Hz, adjust to the relevant current value on the nameplate.

04 Technological material — Noise data

Unrestricted operation | **Fully closed discharge operation**

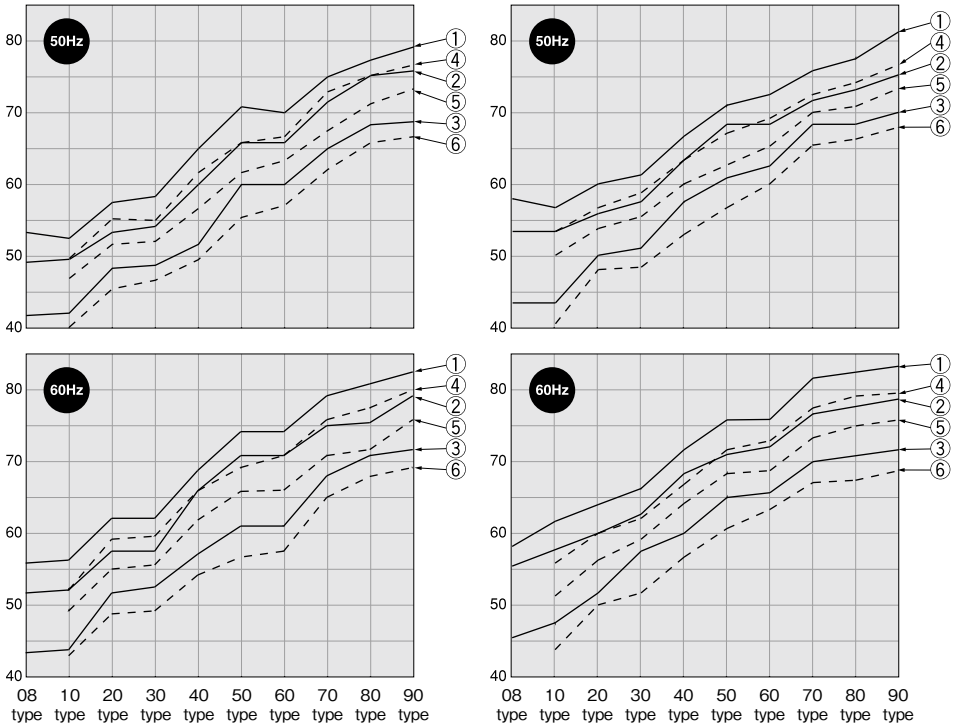

Standard type	Solid line (——)

①When used alone
②With pipe silencer fitted
③With pipe silencer and sound-proof box fitted

Low-noise type	Broken line (- - -)

④When used alone
⑤With pipe silencer fitted
⑥With pipe silencer and sound-proof box fitted

Measurement method

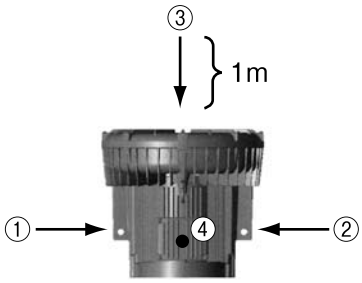

Average of values measured with (1) - (4).

Note: The above noise data is for the 3-phase VFZ Series.

05 Technological material — Parallel operation

Parallel operation with two or more units is possible (see below).

Discharge parallel operation

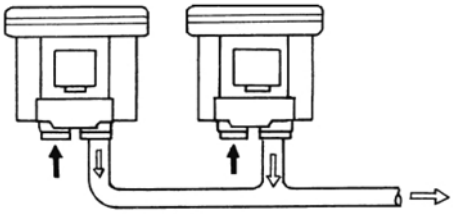

Intake parallel operation

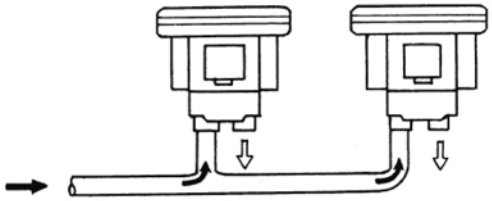

When blowers are operated in parallel, pressure characteristics remain unchanged, and airflow increases by the number of units (see below).
Since airflow increases, the load on the blower also increases, and the usable range is displaced on the graph.
Care is required to ensure that operation does not exceed the usable range.

Characteristic curves with the same blowers in parallel operation.

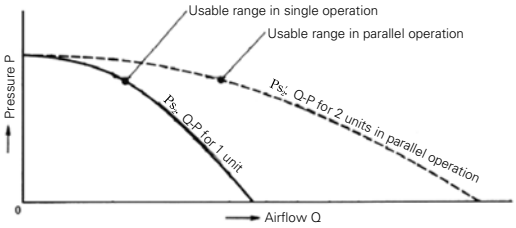

Characteristic curves with different blowers in parallel operation.

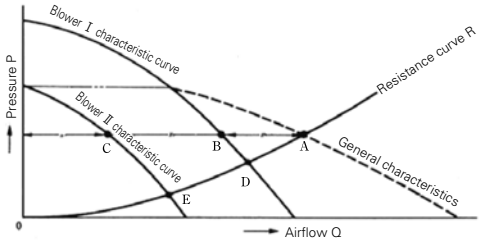

06 Technological material — Reverse operation

Intake and discharge can be switched by running in reverse.
Note that in reverse operation, pressure characteristics and shaft power are approximately 60% of that in forward operation (see below).
Furthermore, reverse operation allows use in cleaning of a variety of air transport equipment.

Characteristics with reverse operation

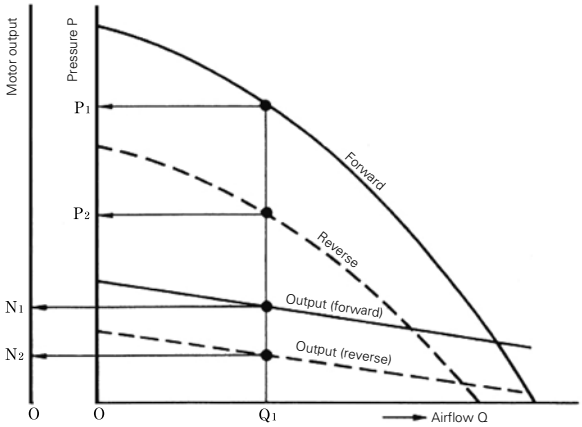

Application examples 1 — **Filter cleaning**

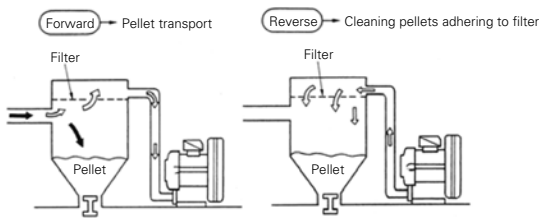

Application examples 2 — **Repeated intake and discharge**

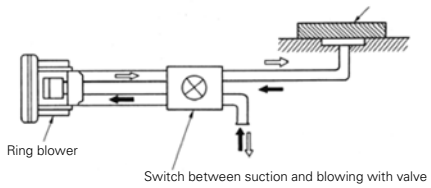

07 Technological material

Variable speed operation with inverter

VFZ081

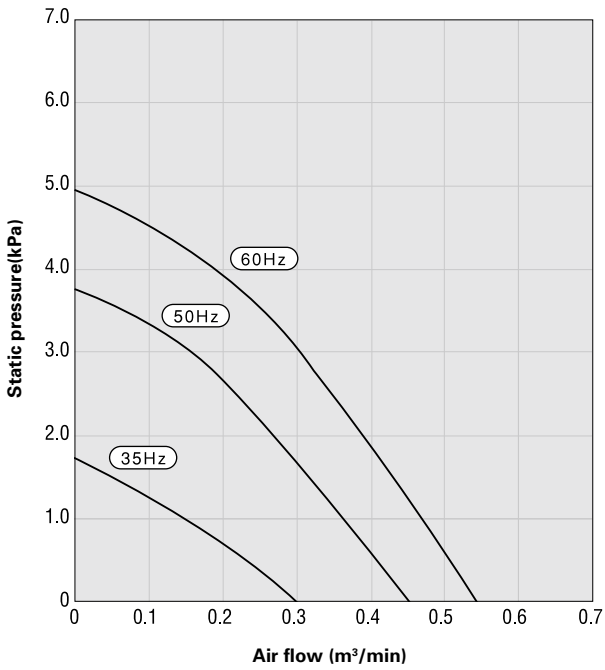

VFZ101

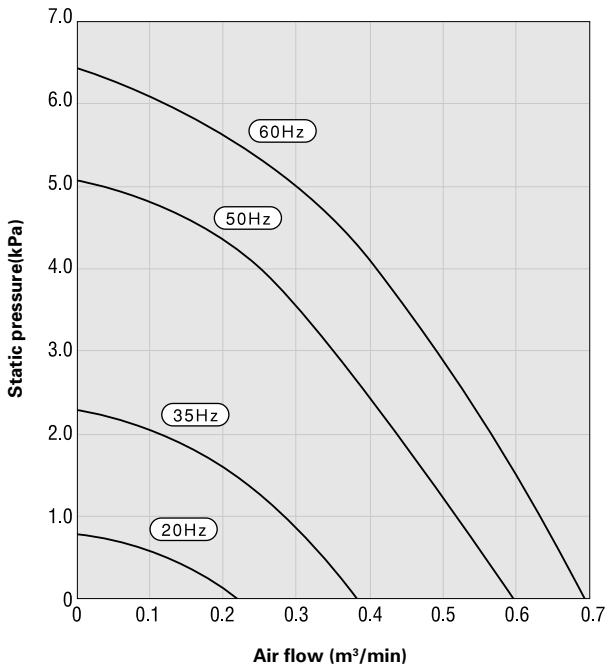

VFZ201

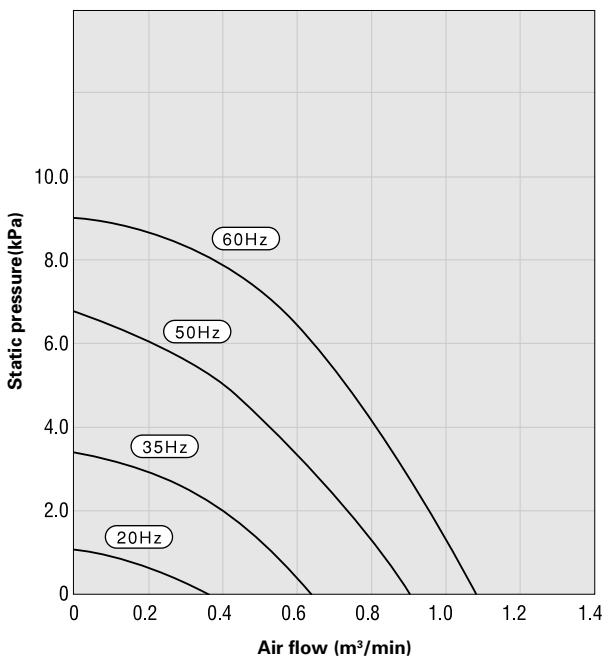

VFZ301

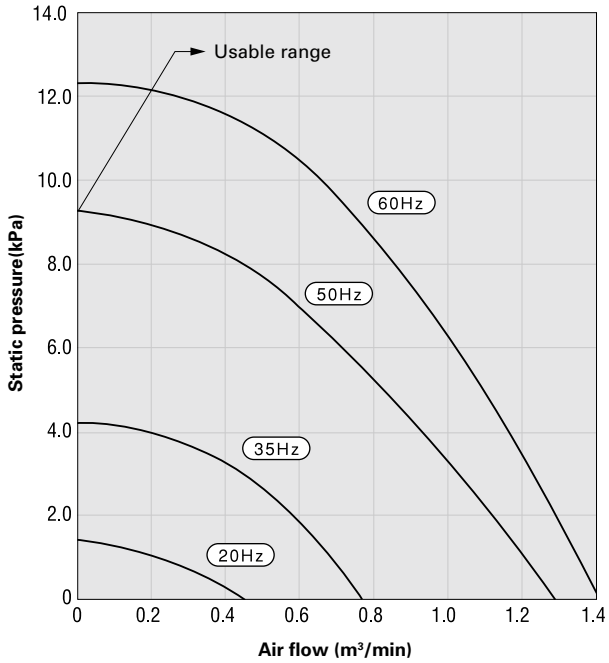

Note: These characteristic curves are for the 3-phase VFZ Series run with the Fuji Electric Systems inverter (FRENIC Series).

VFZ401

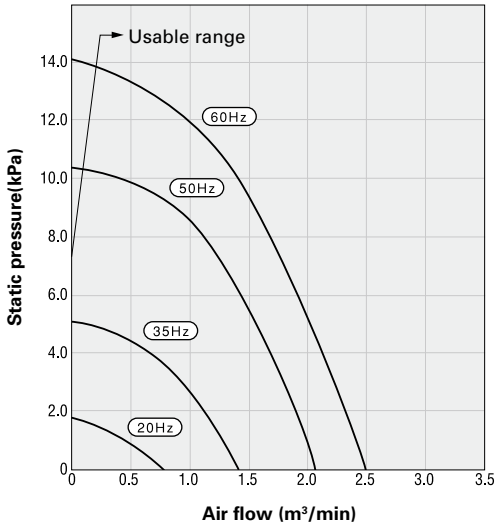

VFZ501

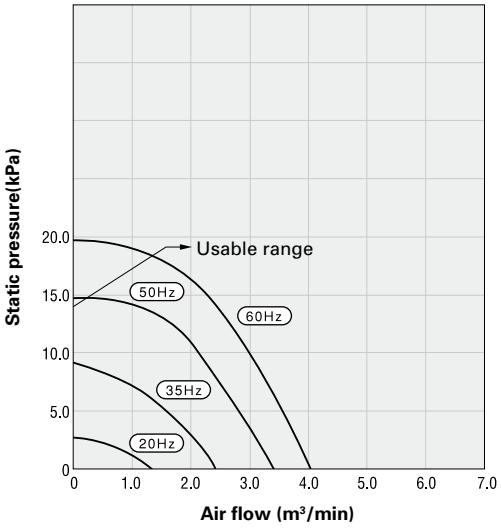

VFZ601

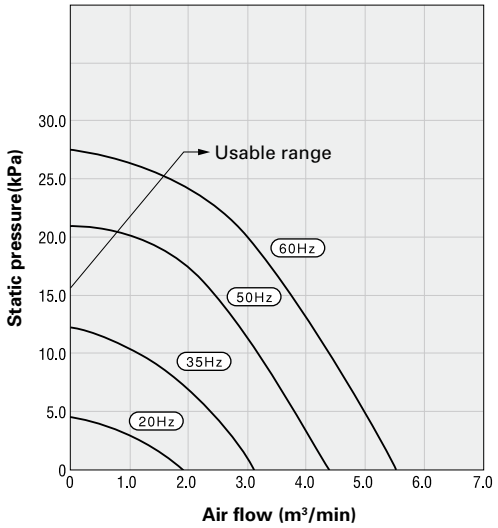

VFZ701

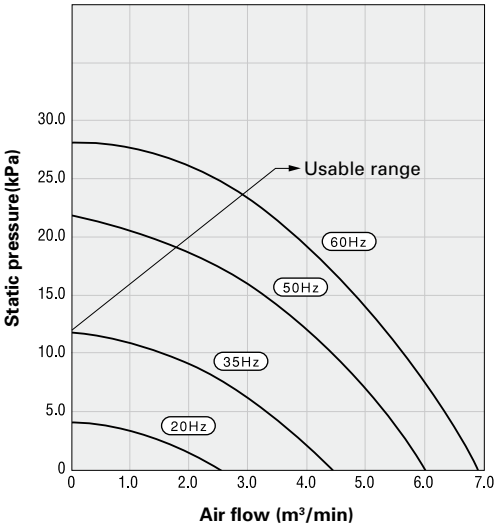

VFZ801

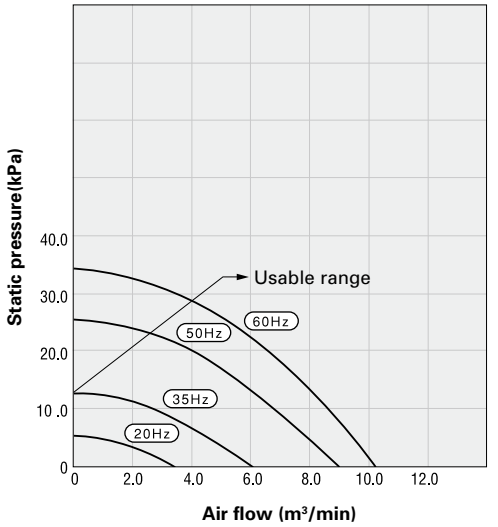

VFZ901

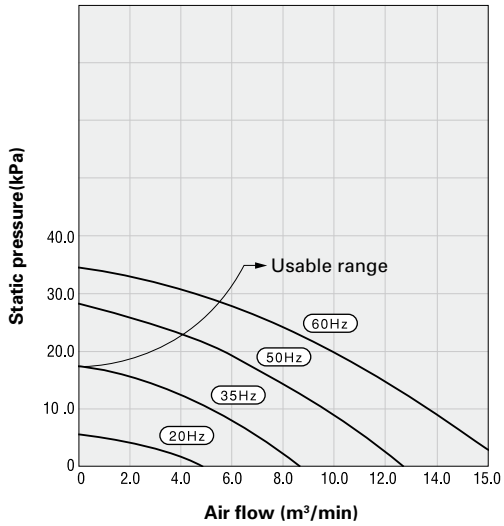

Note: These characteristic curves are for the 3-phase VFZ Series run with the Fuji Electric Systems inverter (FRENIC Series).

08 Technological material

Terminal connections

Make secure terminal connections in accordance with the wiring diagram (inside the terminal box) for the product, the users manual, and the diagrams below.

Note: The VFZ801 and 901 are wired at the factory for line start. Refer to the following diagram before changing to star-delta start.

1 Single phase (PN, P) specification

Model	VFZ081～VFZ401
Lead wire	2-wire
Connection	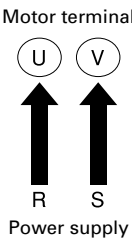

2 3-phase (A, AN, AF) specification

Model	VFZ081～VFZ701	VFZ801,VFZ901	
Lead wire	3-wire	6-wire	
		Full-voltage start (when shipped)	Star-delta start
Connection	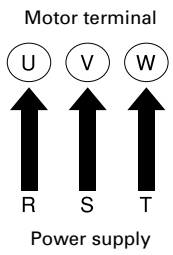	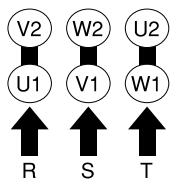	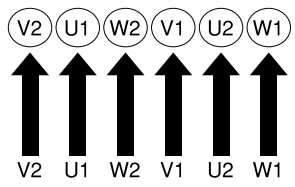

3 Non-standard voltage (-4Z) specification

Model	VFZ081～VFZ701	VFZ801	
Lead wire	3-wire	6-wire	
		Full-voltage start (when shipped)	Star-delta start
Connection	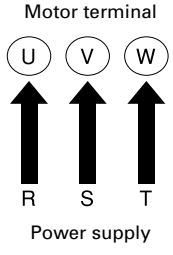	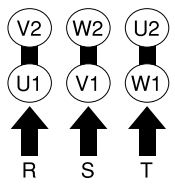	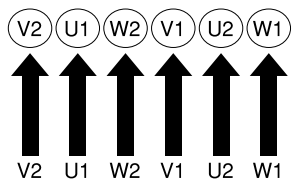

【Reference】

VFZ70 – 90 terminal blocks

Orientation of terminal blocks may be changed to suit conditions of use.

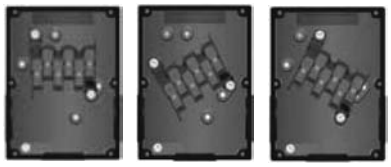

Front (when shipped) | To right | To left

09 Technological material

Bearings and oil seals

[Ring blower]

Model	Bearing		Grease type	Oil seal	
	Operation side	Reverse operation side		Model No.	Material
VFZ081PN	6201ZZ	6201ZZ	Urea	–	–
VFZ101PN	6202ZZ	6202ZZ	Urea	MHS20-30-5	Nitrile rubber
VFZ201PN	6202ZZ	6202ZZ	Urea	SC20-30-7	Nitrile rubber
VFZ301PN	6202ZZ	6202ZZ	Urea	SC20-30-7	Nitrile rubber
VFZ401PN	6204ZZ	6203ZZ	Urea	–	–
VFZ081A	6201ZZ	6201ZZ	Urea	–	–
VFZ101A	6202ZZ	6202ZZ	Urea	VCH20-30-5	Nitrile rubber
VFZ201A	6202ZZ	6202ZZ	Urea	SC20-30-7	Nitrile rubber
VFZ301A	6202ZZ	6202ZZ	Urea	SC20-30-7	Nitrile rubber
VFZ401A	6204ZZ	6203ZZ	Urea	–	–
VFZ501A	6206ZZ	6303ZZ	Urea	–	–
VFZ601A	6206ZZ	6205ZZ	Urea	–	–
VFZ701A	6306ZZ	6206ZZ	Urea	–	–
VFZ801A	6308ZZ	6207ZZ	Urea	–	–
VFZ901A	6308ZZ	6306ZZ	Urea	–	–
VFZ101AF	6202ZZ	6202ZZ	Urea	VCH20-30-5	Nitrile rubber
VFZ201AF	6202ZZ	6202ZZ	Urea	SC20-30-7	Nitrile rubber
VFZ301AF	6202ZZ	6202ZZ	Urea	SC20-30-7	Nitrile rubber
VFZ401AF	6204ZZ	6203ZZ	Urea	–	–
VFZ501AF	6206ZZ	6303ZZ	Urea	–	–
VFZ601AF	6206ZZ	6205ZZ	Urea	–	–
VFZ101AN	6202ZZ	6202ZZ	Urea	VCH20-30-5	Nitrile rubber
VFZ201AN	6202ZZ	6202ZZ	Urea	SC20-30-7	Nitrile rubber
VFZ301AN	6202ZZ	6202ZZ	Urea	SC20-30-7	Nitrile rubber
VFZ401AN	6204ZZ	6203ZZ	Urea	–	–
VFZ501AN	6206ZZ	6303ZZ	Urea	–	–
VFZ601AN	6206ZZ	6205ZZ	Urea	–	–
VFZ701AN	6306ZZ	6206ZZ	Urea	–	–
VFZ801AN	6308ZZ	6207ZZ	Urea	–	–
VFZ901AN	6308ZZ	6306ZZ	Urea	–	–
VFZ081A-4Z	6201ZZ	6201ZZ	Urea	–	–
VFZ101A-4Z	6202ZZ	6202ZZ	Urea	VCH20-30-5	Nitrile rubber
VFZ201A-4Z	6202ZZ	6202ZZ	Urea	SC20-30-7	Nitrile rubber
VFZ301A-4Z	6202ZZ	6202ZZ	Urea	SC20-30-7	Nitrile rubber
VFZ401A-4Z	6204ZZ	6203ZZ	Urea	–	–
VFZ501A-4Z	6206ZZ	6303ZZ	Urea	–	–
VFZ601A-4Z	6206ZZ	6205ZZ	Urea	–	–
VFZ701A-4Z	6306ZZ	6206ZZ	Urea	–	–
VFZ801A-4Z	6308ZZ	6207ZZ	Urea	–	–
VFC405C	6203ZZ	6203ZZ	Lithium	SC22-35-7	Nitrile rubber
VFC505C	6205ZZ	6205ZZ	Urea	MHS35-47-7	Nitrile rubber
VFC605C	6205ZZ	6205ZZ	Urea	MHS35-47-7	Nitrile rubber
VFC080P-5T	6201ZZ	6201ZZ	Lithium	–	–
VFC100P-5T	6202ZZ	6202ZZ	Lithium	MHS20-30-5	Nitrile rubber
VFC200P-5T	6202ZZ	6202ZZ	Lithium	SC20-30-7	Nitrile rubber
VFC300P-5T	6202ZZ	6202ZZ	Lithium	SC20-30-7	Nitrile rubber
VFC400P-5T	6203ZZ	6203ZZ	Lithium	SC22-35-7	Nitrile rubber
VFC080A-2T(4W)	6201ZZ	6201ZZ	Lithium	–	–
VFC100A-7W	6202ZZ	6202ZZ	Lithium	MHS20-30-5	Nitrile rubber
VFC200A-7W	6202ZZ	6202ZZ	Lithium	SC20-30-7	Nitrile rubber
VFC300A-7W	6202ZZ	6202ZZ	Lithium	SC20-30-7	Nitrile rubber
VFC400A-7W	6203ZZ	6203ZZ	Lithium	SC22-35-7	Nitrile rubber
VFC500A-7W	6205ZZ	6205ZZ	Urea	MHS35-47-7	Nitrile rubber
VFC600A-7W	6205ZZ	6205ZZ	Urea	MHS35-47-7	Nitrile rubber
VFC704A-7W	6306ZZ	6206ZZ	Urea	SB38-58-8	Nitrile rubber
VFC804A-7W	6308UU	6207ZZ	Lithium	ISMX50-64-10	Silicon rubber
VFC904A-7W	6309ZZ	6308ZZ	Urea	SB55-72-9	Silicon rubber

Model	Bearing		Grease type	Oil seal	
	Operation side	Reverse operation side		Model No.	Material
VFC208Z	6204ZZ	6202ZZ	Lithium	SC20-30-7	Nitrile rubber
VFC308Z	6204ZZ	6202ZZ	Lithium	SC20-30-7	Nitrile rubber
VFC408Z	6204ZZ	6203ZZ	Lithium	SC19-35-8	Nitrile rubber
VFC508Z	6206ZZ	6205ZZ	Urea	SC28-45-8	Nitrile rubber
				MHS35-47-7	Nitrile rubber
				MHSA30-45-8	Nitrile rubber
				HM25-38-5	Nitrile rubber
VFC608Z	6206ZZ	6205ZZ	Urea	SC28-45-8	Nitrile rubber
				MHS35-47-7	Nitrile rubber
				MHSA30-45-8	Nitrile rubber
				HM25-38-5	Nitrile rubber
VFC318P	6202ZZ	6202ZZ	Lithium	SC20-30-7	Nitrile rubber
VFC318A	6202ZZ	6202ZZ	Lithium	SC20-30-7	Nitrile rubber
VFD308PB	6203ZZ	6202ZZ	Lithium	SC22-35-7	Nitrile rubber
VFD308AB	6203ZZ	6202ZZ	Lithium	SC22-35-7	Nitrile rubber

10 Technological material

Model selection

These blower characteristics vary considerably depending on piping conditions. Losses due to pipe length and joints are greater than initially apparent, and piping should therefore be designed for minimum length, and minimum number of curves (e.g. elbows), joins, and valves. Pipe diameter should be as close to the blower discharge diameter as possible. A number of model selection examples are provided below.

Discharge application example Blowing off water droplets

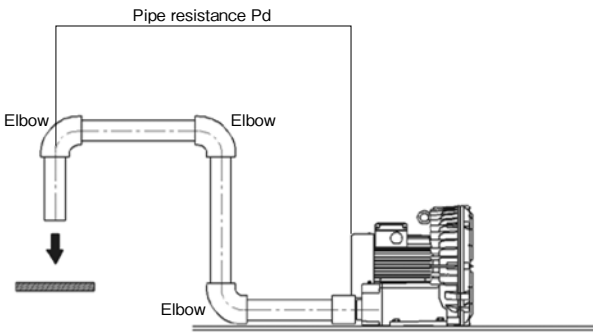

Conditions
1. Required airflow speed: V_1[m/s]
2. Slit cross-section area: S[m²]
3. Pipe diameter: ϕd[m]
   Pipe cross-section area: D[m²]
4. Pipe length: L[m]

Remarks
λ: Pipe friction coefficient 0.02
γ: Specific gravity of air 1.2

Step 1 Required airflow calculation

$$Q=SV_1 \quad [m^3/min]$$

Step 2-1 Pressure loss calculation (slit loss Pd_m)

・Slit loss $Pd_m = \frac{\gamma V_1^2}{2}$ [m/s]

Step 2-2 Pressure loss calculation (pipe resistance Pd_p)

・Airflow speed in pipe $V_2 = \frac{Q}{D}$ [m/s]

・Pipe resistance $Pd_p = \lambda \times \frac{L}{d} \times \frac{\gamma V_2^2}{2}$ [Pa]

Step 3 Required static pressure calculation

$$Pd_t=Pd_m+Pd_p \text{ [Pa]}$$

Model selection

From the above
Required airflow: Q[m³/min] Required static pressure: Pdt[Pa]
Select a blower satisfying the above requirements.

Intake application Gripping and holding objects

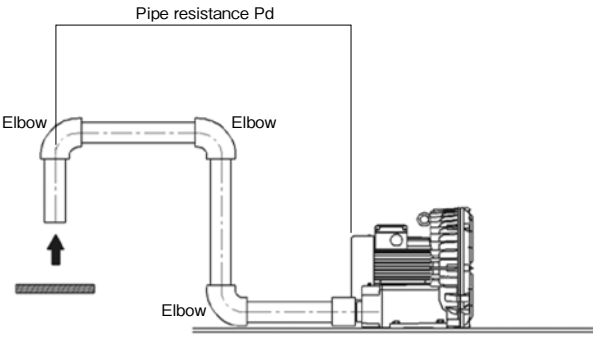

Conditions
1. Work mass: W[kg]
2. Gripping area: Ss[m²]
   Open area: So[m²]
3. Pipe diameter: ϕd[m]
   Pipe cross-section area: D[m²]
4. Pipe length: L[m]

Remarks
λ: Pipe friction coefficient 0.02
γ: Specific gravity of air 1.2

Step 1 Required dynamic pressure calculation (Pd_m)

$$Pd_m = \frac{W}{S_s} \text{ [Pa]}$$

Step 2 Required airflow calculation

$$V_1 = \sqrt{\frac{2Pd_m}{\gamma}} \text{ [m/s]}$$

Step 3 Required airflow calculation

$$Q = 60 \times S_0 \times V_1 \quad [m^3/min]$$

Step 4 Pipe loss calculation (pipe resistance Pdp)

・Airflow speed in pipe $V_2 = \frac{Q}{D}$ [m/s]

・Pipe resistance $Pd_p = \lambda \times \frac{L}{d} \times \frac{\gamma V_2^2}{2}$ [Pa]

Step 5 Required static pressure calculation

$$Pd_t=Pd_m+Pd_p \text{ [Pa]}$$

Model selection

From the above
Required airflow: Q[m³/min] Required static pressure: Pdt[Pa]
Select a blower satisfying the above requirements.

01 Attention when using it

Installation

Item	Conditions
Indoors/outdoors	This blower is for indoor use. Install in a location away from rain and wind.
Ambient temperature	-10℃ to 40℃ (without freezing)
Relative humidity	Maximum 80%
Environment	Do not use in, or transport through, locations where corrosive liquids (alkali acids, acids) and gases (inflammable, explosive) are present.
Dust etc.	Avoid use in locations where dust and lint etc. are present. If such locations cannot be avoided, fit a filter to ensure that the material does not enter the blower. (Periodically remove dust etc. adhering to the blower.)
Ventilation	Always select a location with good ventilation. Do not use in closed rooms or cases.
Peripheral area	Install in a spacious area to facilitate checks and maintenance.
Vibration	Install the blower in a manner which ensures that it is free from external vibration. If such vibration cannot be avoided, implement anti-vibration measures to ensure that the vibration is not transmitted to the blower.

02 Attention when using it

Operation and gases handled

Item	Conditions
Voltage and frequency	Use at the voltage and frequency noted on the nameplate.
Ratings	Usable in continuous operation.
Allowable range of variation in voltage and frequency	Rated voltage on nameplate (Voltage (V)) ±10% Rated frequency on nameplate (Frequency (Hz))±5% Note: When both voltage and frequency vary, ensure that the respective ranges are not exceeded, and that the sum of the absolute values of both is within ±10%. ※Applies when operating current is equal to or less than the rated current on the nameplate.
Temperature of gas	-10℃ to 40℃
Humidity of gas	Maximum 80%
Specific gravity of gas	Same or less than air
Type of gas	Do not use with corrosive liquids (alkali acids, acids) and gases (inflammable, explosive).
Foreign matter	Ensure that foreign matter (e.g. dust, lint, swarf) is not ingested into the blower under any circumstances.
Water droplets and liquids	The blower cannot be used to move water droplets or liquids.
Rotation	The normal direction of rotation is displayed on the blower. (The prescribed characteristics are not achieved in reverse rotation. Intake and discharge are reversed with reverse rotation.)

03 Inverter operation

Attention when using it

Operating frequency is between 5 Hz (rotating) and 60 Hz.
Do not operate at more than 60 Hz under any circumstances.
Furthermore, resonance is possible depending on the blower installation conditions. Ensure that the resonance point is avoided in operation.

04 Frequency of use

Attention when using it

Frequent use may have a negative affect on the motor, and may result in motor burnout. Ensure that the duration of operation is in accordance with the guidelines in the table at right. A method of switching valves etc. (with continuous operation) is recommended if this duration is to be exceeded. Furthermore, when operating in forward and reverse, ensure that operation in the new direction is started only after a complete stop.

Permissible start/stop frequency [Sw/Hr]

Model	Sw/Hr (at 50/60Hz)
VFZ081～VFZ301	Maximum 30/20
VFZ401～VFZ601	Maximum 20/15
VFZ701～VFZ901	Maximum 15/10

05 Cleanliness

Attention when using it

These blowers are manufactured for general industrial use, and discharge air is not in accordance with cleanliness classes.
Please note that in applications in which adherence of foreign matter is not permitted, or when a high cleanliness class is required, it will be necessary to fit filters etc.

06 Range of use

Attention when using it

As the airflow through the ring blower is reduced, internal temperature increases, and care is required to ensure that the range of use does not exceed the characteristic curves.
Furthermore, when using VFZ50 and 60 types in intake fully closed applications, always ensure that the emblem on the unit (top of intermediate bracket) is removed before installation.
Operation without removing the emblem may result in deterioration of the motor insulation and burnout.

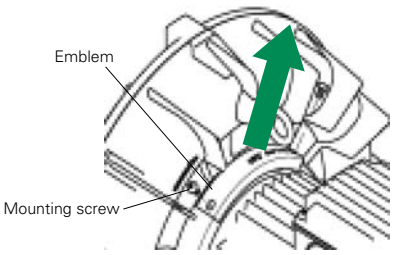

07 Characteristics

Attention when using it

Characteristics differ between intake and discharge application. Check the individual characteristic curves.

08 Attention when using it

Exhaust temperature (VFZ Series)

As shown at right, the temperature of the air passing through the blower increases. Particularly with near-closed operation, care is required since temperature is increased considerably. (Contact the manufacturer before running in near-closed conditions.)

Note 1: Exhaust temperature is added to intake air temperature.
Note 2: The actual temperature may differ slightly from the temperature increase curve above. These values are for reference only.

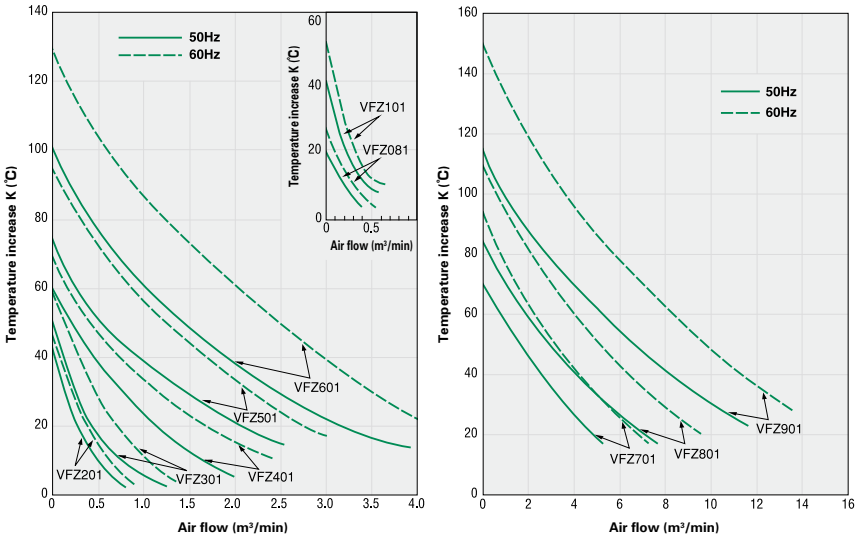

Exhaust temperature increase curve (at discharge outlet)

09 Attention when using it

Parallel operation

Pressure and temperature are very high with this ring blower, and serial operation should therefore be avoided (parallel operation permitted).

10 Attention when using it

Mounting direction

Standard mounting (installation) is horizontal. Mounting in other orientations differs with type etc. Refer to the diagrams below.

08 – 60 types

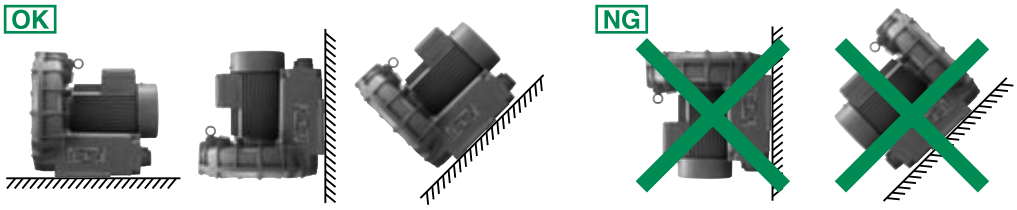

70 – 90 types
Water-resistant type